Product quick info

Feltnova

MOVEMENT SYSTEMS

NEW

# Belt scraper beige
## (Dual durometer design)

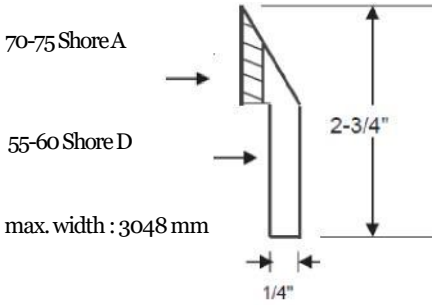


## Applications

- Food industry
- Remove product residues
- Cleaning of the belt surface

## Properties/Advantages

- Unique dual durometer design:
  =>rigid scraper body/no additional support needed
  =>soft scraper lip/excellent cleaning result also in combination with solft surfaces, preventing material from re-entering the system
- Highly wear resistant
- Minimal stress on the belt joint
- Longer life of belt and splice
- Compliant to FDA and EU regulations

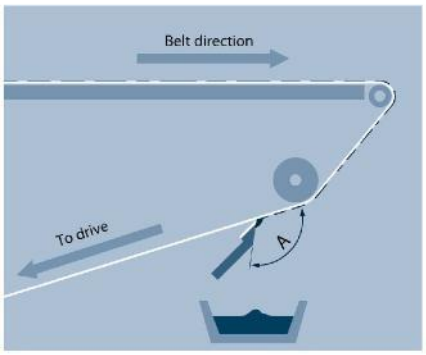


Scraper should lightly touch the belt on the return side just after product has been discharged. The angle “A” normally will be between 100 and 120 degrees.

## Basic technical data

| | |
|---|---|
| Article no. | 882155 |
| Material | urethane |
| Hardness scraper body [Shore D] | 55-60 |
| Hardness Scraper lip [Shore A] | 70-75 |
| Colour | beige/red (similar RAL 3012) |
| Max. width [mm] | 3048 |
| Food grade | FDA, EU |
| Max. temperature [°C] | 83 |

Product Quick Info 882155-2 · 04/18
FMS · Reproduction of text or parts thereof only with our approval.
Modifications reserved.

Feltnova GmbH
Lilienthalstraße 6/8, D-30179 Hannover
Telefon +49 511 67 04 0, Fax +49 511 67 04 305