Product quick info

Feltnova

MOVEMENT SYSTEMS

NEW



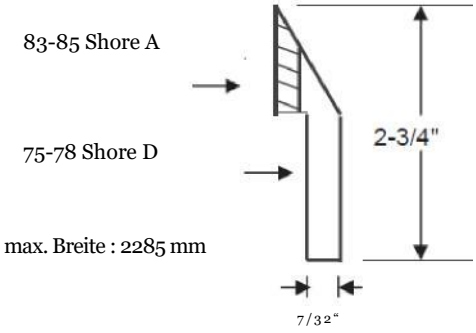

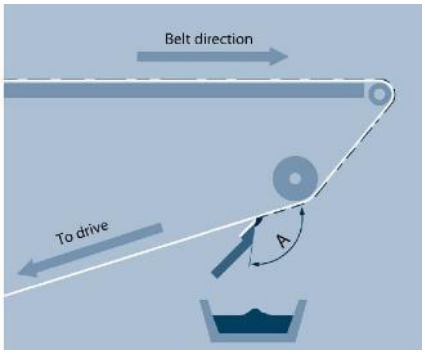

Scraper should lightly touch the belt on the return side just after product has been discharged. The angle “A” normally will be between 100 and 120 degrees.

Belt scraper white
(Dual durometer design)

Applications

- Food industry
- Remove product residues
- Cleaning of the belt surface

Properties/Advantages

- Unique dual durometer design:
  =>rigid scraper body/no additional support needed
  =>soft scraper lip/excellent cleaning result also in combination with solft surfaces, preventing material from re-entering the system
- Highly wear resistant
- Minimal stress on the belt joint
- Longer life of belt and splice
- Compliant to FDA and EU regulations

Basic technical data

Article no.	882156
Material	urethane
Hardness scraper body [Shore D]	75-78
Hardness scraper lip [Shore A]	83-85
Colour	white
Max. width [mm]	2285
Food grade	FDA, EU
Max. temperature [°C]	83

Product Quick Info 882156-2 · 04/18
FMS · Reproduction of text or parts thereof only with our approval.
Modifications reserved.

Feltnova GmbH
Lilienthalstraße 6/8, D-30179 Hannover
Telefon +49 511 67 04 0, Fax +49 511 67 04 305