Belt scraper module and Scraper range

Feltnova
MOVEMENT SYSTEMS

Belt scraper module

Properties

– suitable for belt scrapers of urethane and polyester
– robust and compact design
– adjustable, continuously contact force
– adjustable scraper angle

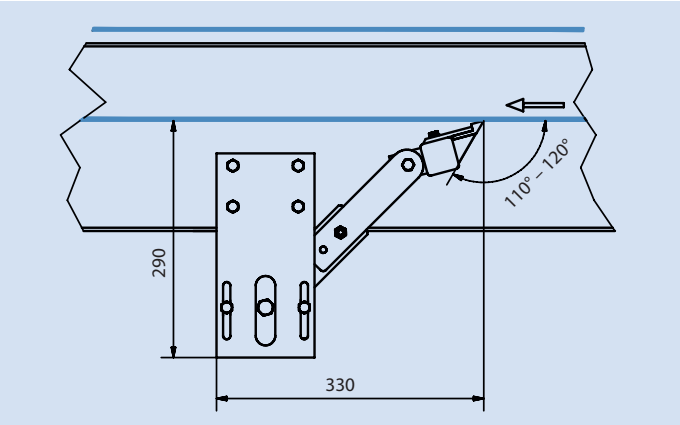

Technical data

Basic material fixing element		stainless steel
Contact force	[N/mm]	0.1
Angle	[°]	110 – 120
Belt widths	[mm]	300 – 1500 (individual widths on request)
Basic material scraper		polyurethane (U) and polyester (E)

Scraper range

Scraper U
beige
Art. no. 882155
RAL 3012

Lip: Shore A 75
Body: Shore D 60

– Co-extruded
– EU and FDA compliant

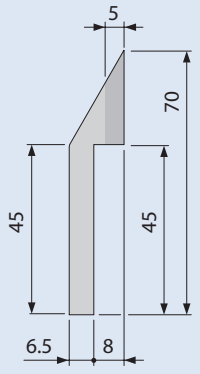

Scraper U
white
Art. no. 882156
RAL 9016

Lip: Shore A 85
Body: Shore D 78

– Co-extruded
– EU and FDA compliant

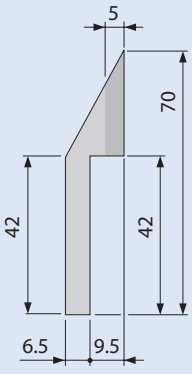

Scraper MD U
blue
Art. no. 882228
RAL 5003

Shore A 95

– Metal detectable
– EU and FDA compliant

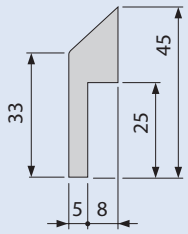

Scraper U
blue
Art. no. 880137
RAL 5015

Lip: Shore A 85
Body: Shore D 78

– Co-extruded
– EU and FDA compliant

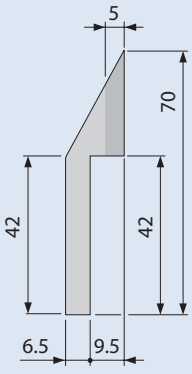

Scraper E
cream white
Art. no. 880066
RAL 9001

Shore D 63

– Pyrolyse confirm
– FDA compliant

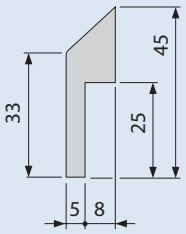

All dimensions in mm.
The dimensions given for the scrapers are subject to the usual tolerances of extruded plastic products.

Ref. no. 431-2
09/18 · Reproduction of text or parts thereof only with our approval. Modifications reserved.