EXCERPT FROM PROLINK ENGINEERING MANUAL

05/26 (Ref-No. 888)

siegling prolink
modular belts

SERIES 14

Straight running belts
Pitch 12.7 mm (0.50 in)

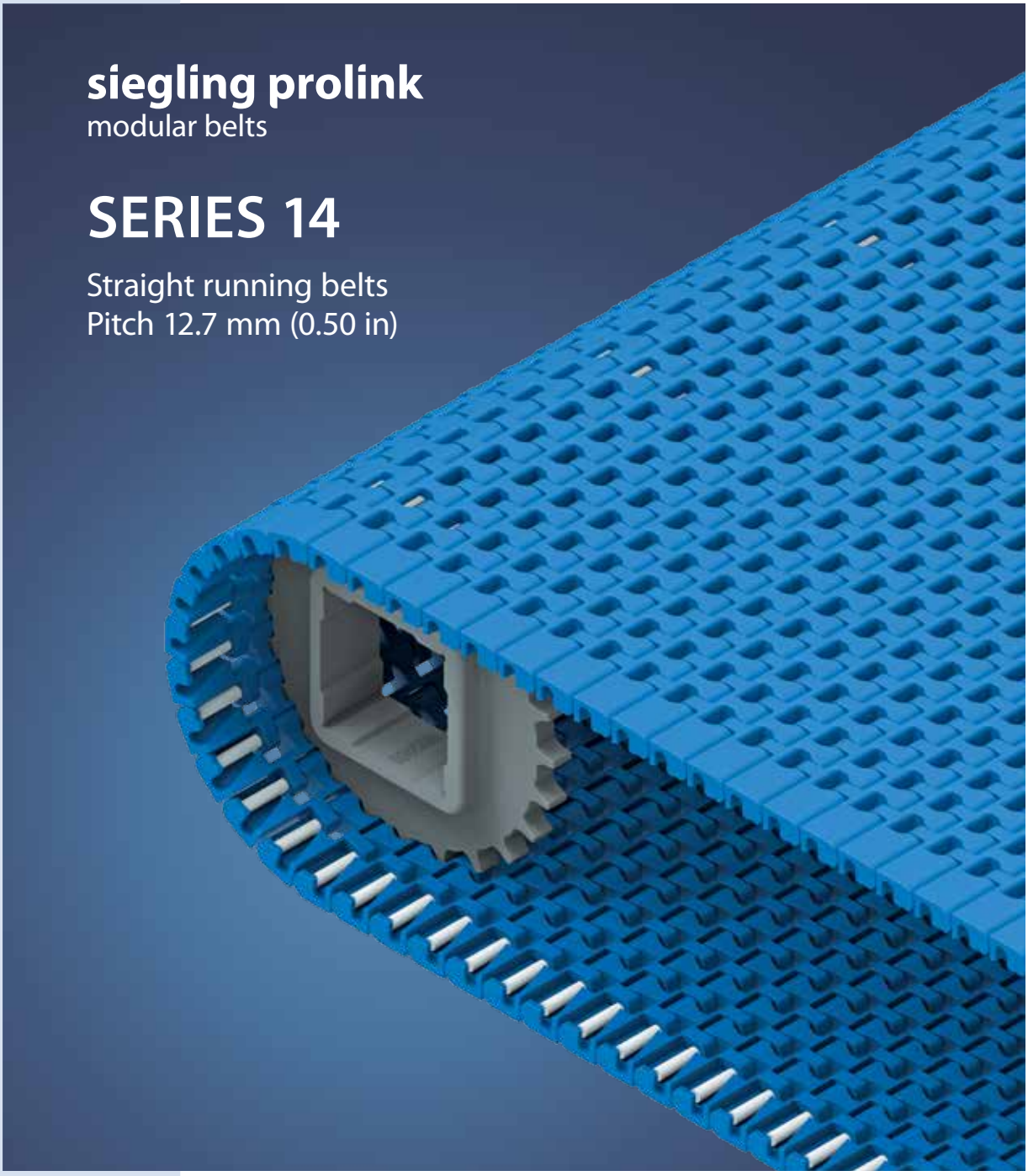

Forbo Siegling GmbH
Lilienthalstraße 6/8, D-30179 Hannover
Telefon +49 511 6704 0
www.forbo-siegling.com, siegling@forbo.com

Ref. no. 888-1_1.2_S14

SERIES 14 | **OVERVIEW**

Straight running belts | Pitch 12.7 mm (0.50 in)

siegling prolink
modular belts

Belts for medium-duty food and non-food applications

Side view scale 1:1

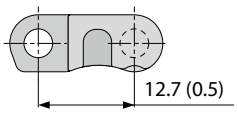

Available surface pattern and opening area

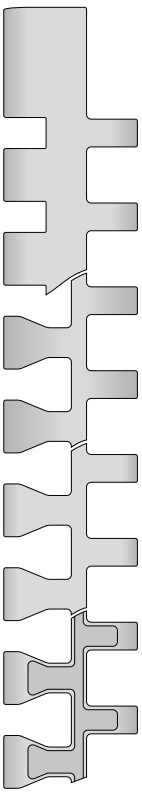

S14-0 FLT
Closed, smooth surface

S14-25 FLT
Open (25 %), smooth surface

S14-25 CUT
Open (25 %) surface with curve top surface

S14-25 FRT1
Open (25 %) surface with friction top

Design characteristics

- Mini pitch belt with small transfer gap
- Robust design guarantees superior durability and high belt pull capacity
- Design for smooth run on 19 mm (0.75 in) nose bar
- Headless pin system making it easy to install and remove the belt for maintenance
- Closed, solid belt edge to prevent belt edge damages

Basic data

Pitch	12.7 mm (0.50 in)
Belt width min.	76.2 mm (3.0 in)
Width increments	12.7 mm (0.50 in)
Hinge pins	3.4 mm (0.13 in) made of plastic (PP, PBT, PE). One-piece up to a belt width of 4000 mm (157.5 in).

NSF Certified

NSF-compliant from these certified Forbo plants: Huntersville (USA), Malacky (Slovakia), Tlalnepantla (Mexico)

Sprockets
in different sizes with round or square bore



Profiles
in different heights and designs for inclines

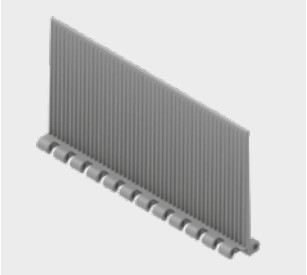

Detail hinge pin
Headless one-piece pin with unique retention system ensures trouble free installation and maintenance

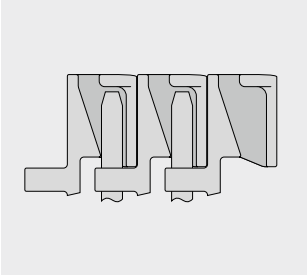

SERIES 14 | **BELT TYPES**

siegling prolink
modular belts

Straight running belt | Pitch 12.7 mm (0.50 in)

S14-0 FLT | 0 % Opening | Flat top

Closed, smooth surface | Flat top surface

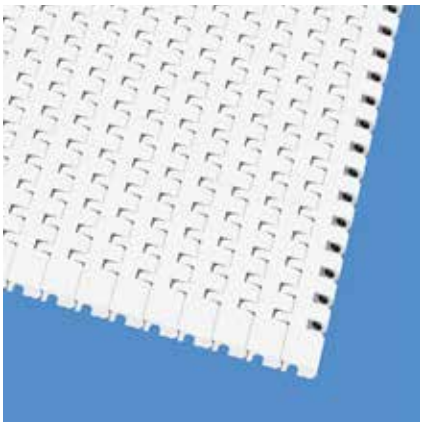

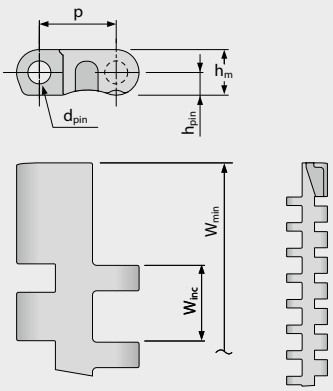

Belt dimensions

	p	d_{pin}	h_m	h_{pin}	h_s	W_{min}	W_{inc}	W_{tol}	Minimum flex radii[1]				
	Pitch	Pin Ø	Thickness	Pin position	Height	Width min.	Width Increment	Width tolerance [%]	r1 C_c x W_B	r2	r3	r4	r5
mm	12.7	3.4	7.5	3.8	0.0	76.2	12.7	±0.20	–	9.5	25.4	38.1	12.7
inch	0.5	0.13	0.3	0.15	0.0	3.0	0.5	±0.20	–	0.38	1.0	1.5	0.5

Available standard materials [3]

Belt		Pin		Nominal belt pull, straight		Weight		Width deviation	Temperature		Certificates[2]		
Material	Color	Material	Color	[N/mm]	[lb/ft]	[kg/m²]	[lb/ft²]	[%]	[°C]	[°F]	FDA	EU	MHLW
PE	BL	PE	WT	6.5	445	5.0	0.96	-0.13	-70/65	-94/149	●	●	●
PE	WT	PE	WT	6.5	445	5.0	0.96	-0.13	-70/65	-94/149	●	●	●
POM	BL	PBT	UC	24	1645	7.5	1.41	0.0	-45/90	-49/194	●	●	●
POM	WT	PBT	UC	24	1645	7.5	1.41	0.0	-45/90	-49/194	●	●	●
PP	BL	PP	WT	9	617	4.8	1.0	0.43	5/100	41/212	●	●	●
PP	WT	PP	WT	9	617	4.8	1.0	0.43	5/100	41/212	●	●	●

■ BL (Blue), □ UC (Uncolored), □ WT (White)

All measurements and tolerances apply at 21 °C; for temperature deviations please see Prolink manual chapter 4.4 "Temperature influence".
All imperial dimensions (inches) are rounded off.

[1] Flex radii: r1 = side flex, r2 = front flex on roller, r3 = back flex on load bearing roller, r4 = back flex on Hold Down shoe, r5 = back flex on roller

[2] Complies with FDA 21 CFR | Complies with (EU) 10/2011 and (EC) 1935/2004 regulations regarding the raw materials used and the migration thresholds | Complies with Japanese MHLW Notification 370

● = available | – = not available | empty cells = not tested

[3] More materials and colors on request

Forbo
MOVEMENT SYSTEMS

SERIES 14 | **BELT TYPES**

siegling prolink
modular belts

Straight running belt | Pitch 12.7 mm (0.50 in)

S14-25 FLT | 25 % Opening | Flat top

Open version (25 %) for excellent air circulation and drainage | 52 % contact area (Largest opening: 8.2 x 2.7 mm/0.32 x 0.11 in) | Smooth surface

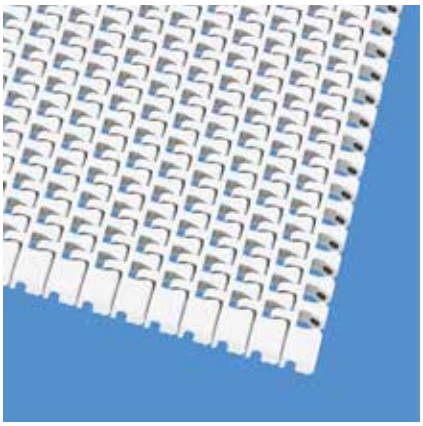

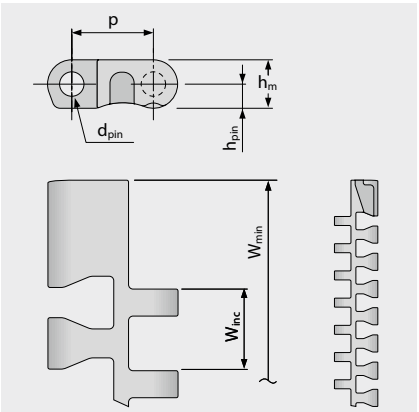

Variant specific dimensions [mm (in)]

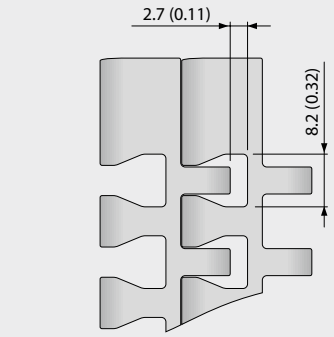

Belt dimensions

	p	d_{pin}	h_m	h_{pin}	h_s	W_{min}	W_{inc}	W_{tol}	Minimum flex radii[1]				
	Pitch	Pin Ø	Thickness	Pin position	Height	Width min.	Width Increment	Width tolerance [%]	r1 C_c x W_B	r2	r3	r4	r5
mm	12.7	3.4	7.5	3.8	0.0	76.2	12.7	±0.20	–	9.5	25.4	38.1	12.7
inch	0.5	0.13	0.3	0.15	0.0	3.0	0.5	±0.20	–	0.38	1.0	1.5	0.5

Available standard materials [3]

Belt		Pin		Nominal belt pull, straight		Weight		Width deviation	Temperature		Certificates[2]		
Material	Color	Material	Color	[N/mm]	[lb/ft]	[kg/m²]	[lb/ft²]	[%]	[°C]	[°F]	FDA	EU	MHLW
PE	BL	PE	WT	6.5	445	4.7	0.96	-0.13	-70/65	-94/149	●	●	●
POM	BL	PBT	UC	24	1645	7.0	1.41	0.0	-45/90	-49/194	●	●	●
POM	WT	PBT	UC	24	1645	7.0	1.41	0.0	-45/90	-49/194	●	●	●
PP	BL	PP	WT	9	617	4.5	1.0	0.43	5/100	41/212	●	●	●
PP	WT	PP	WT	9	617	4.5	1.0	0.43	5/100	41/212	●	●	●
Mold to order belts													
PA*	BL	PBT	UC	22	1507	5.8	1.19	0.92	-40/120	-40/248	●	●	●
PE	WT	PE	WT	6.5	445	4.7	0.96	-0.13	-70/65	-94/149	●	●	●

* Values valid for dry applications (RH <50 %). Belts in PA material will absorb water in wet environments, causing them to expand and reduce the nominal belt pull capacity.

BL (Blue), UC (Uncolored), WT (White)

All measurements and tolerances apply at 21 °C; for temperature deviations please see Prolink manual chapter 4.4 "Temperature influence".
All imperial dimensions (inches) are rounded off.

[1] Flex radii: r1 = side flex, r2 = front flex on roller, r3 = back flex on load bearing roller, r4 = back flex on Hold Down shoe, r5 = back flex on roller

[2] Complies with FDA 21 CFR | Complies with (EU) 10/2011 and (EC) 1935/2004 regulations regarding the raw materials used and the migration thresholds | Complies with Japanese MHLW Notification 370
● = available | – = not available | empty cells = not tested

[3] More materials and colors on request

Forbo
MOVEMENT SYSTEMS

SERIES 14 | **BELT TYPES**

siegling prolink
modular belts

Straight running belt | Pitch 12.7 mm (0.50 in)

S14-25 CUT | 25 % Opening | Curved top

Open version (25 %) for excellent air circulation and drainage | 26 % contact area (Largest opening: 8.2 x 2.7 mm/0.32 x 0.11 in) | Curved top

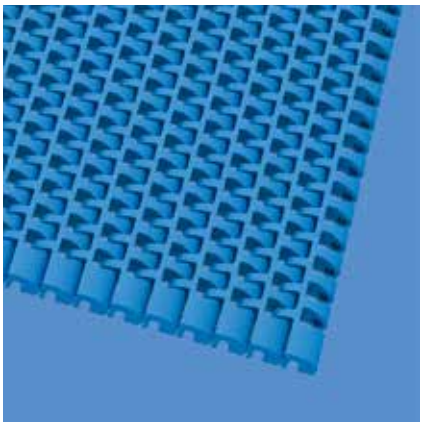

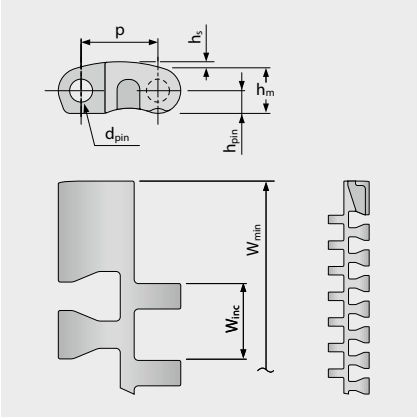

Variant specific dimensions [mm (in)]

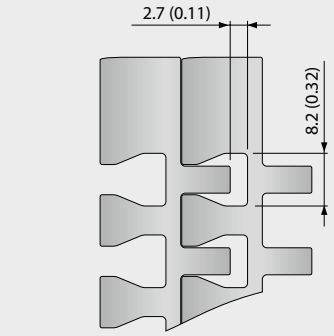

Belt dimensions

	p	d_{pin}	h_m	h_{pin}	h_s	W_{min}	W_{inc}	W_{tol}	Minimum flex radii[1]			
	Pitch	Pin Ø	Thickness	Pin position	Height	Width min.	Width Increment	Width tolerance [%]	r1 C_c x W_B	r2	r3	r4	r5
mm	12.7	3.4	7.5	3.8	1.1	76.2	12.7	±0.20	–	9.5	25.4	38.1	12.7
inch	0.5	0.13	0.3	0.15	0.04	3.0	0.5	±0.20	–	0.38	1.0	1.5	0.5

Available standard materials [3]

Belt		Pin		Nominal belt pull, straight		Weight		Width deviation	Temperature		Certificates[2]		
Material	Color	Material	Color	[N/mm]	[lb/ft]	[kg/m²]	[lb/ft²]	[%]	[°C]	[°F]	FDA	EU	MHLW
POM	BL	PBT	UC	24	1645	7.3	1.5	0.0	-45/90	-49/194	●	●	●
Mold to order belts													
PP	BL	PP	WT	9	617	4.8	0.98	0.43	5/100	41/212	●	●	●

BL (Blue), UC (Uncolored), WT (White)

All measurements and tolerances apply at 21 °C; for temperature deviations please see Prolink manual chapter 4.4 "Temperature influence".
All imperial dimensions (inches) are rounded off.

[1] Flex radii: r1 = side flex, r2 = front flex on roller, r3 = back flex on load bearing roller, r4 = back flex on Hold Down shoe, r5 = back flex on roller

[2] Complies with FDA 21 CFR | Complies with (EU) 10/2011 and (EC) 1935/2004 regulations regarding the raw materials used and the migration thresholds | Complies with Japanese MHLW Notification 370

● = available | – = not available | empty cells = not tested

[3] More materials and colors on request

forbo
MOVEMENT SYSTEMS

SERIES 14 | **BELT TYPES**

siegling prolink
modular belts

Straight running belt | Pitch 12.7 mm (0.50 in)

S14-25 FRT1 | 25 % Opening | Friction top (Design 1)

Open version (25 %) for excellent air circulation and drainage with flat integrated friction pads (FRT1) for high grip | 32 % contact area | Version only available without FRT1 structure at the side (17 mm indent)

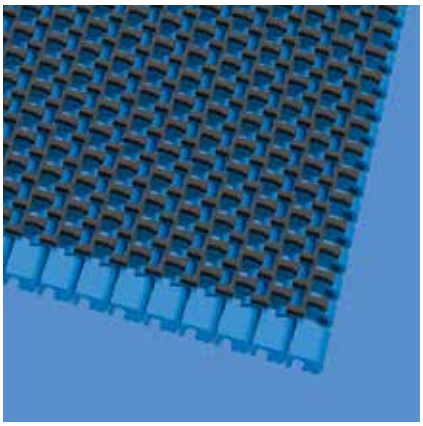

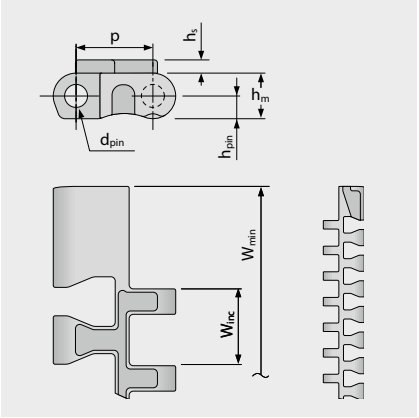

Variant specific dimensions [mm (in)]

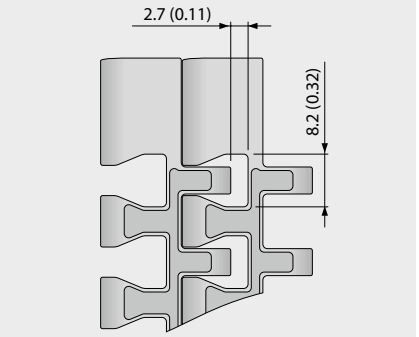

Belt dimensions

	p	d_{pin}	h_m	h_{pin}	h_s	W_{min}	W_{inc}	W_{tol}	Minimum flex radii[1]				
	Pitch	Pin Ø	Thickness	Pin position	Height	Width min.	Width Increment	Width tolerance [%]	r1 C_c x W_B	r2	r3	r4	r5
mm	12.7	3.4	7.5	3.8	2.2	76.2	12.7	±0.20	–	9.5	25.4	38.1	12.7
inch	0.5	0.13	0.3	0.15	0.09	3.0	0.5	±0.20	–	0.38	1.0	1.5	0.5

Available standard materials [3]

Belt		Pin		Rubber		Nominal belt pull, straight		Weight		Width deviation	Temperature		Certificates[2]		
Material	Color	Material	Color	Material	Color	[N/mm]	[lb/ft]	[kg/m²]	[lb/ft²]	[%]	[°C]	[°F]	FDA	EU	MHLW
PP	BL	PP	WT	R7	BK	9	617	5.1	1.05	0.43	5/100	41/212	●	●	
PP	WT	PP	WT	R7	BG	9	617	5.1	1.05	0.43	5/100	41/212	●	●	

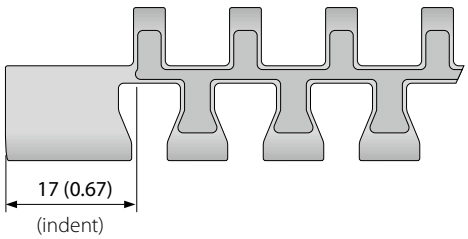

BG (Beige), BK (Black), BL (Blue), WT (White)

All measurements and tolerances apply at 21 °C; for temperature deviations please see Prolink manual chapter 4.4 "Temperature influence".
All imperial dimensions (inches) are rounded off.

[1] Flex radii: r1 = side flex, r2 = front flex on roller, r3 = back flex on load bearing roller, r4 = back flex on Hold Down shoe, r5 = back flex on roller

[2] Complies with FDA 21 CFR | Complies with (EU) 10/2011 and (EC) 1935/2004 regulations regarding the raw materials used and the migration thresholds | Complies with Japanese MHLW Notification 370

● = available | – = not available | empty cells = not tested

[3] More materials and colors on request

Forbo
MOVEMENT SYSTEMS

S14 SPR | Sprockets

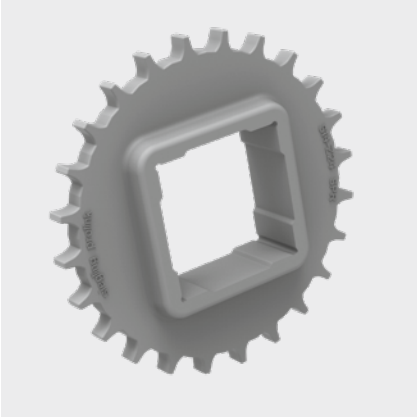

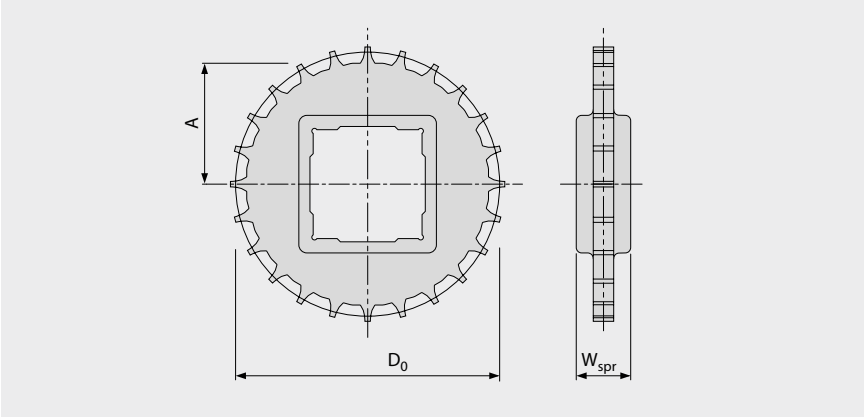

Main dimensions

Sprocket size (Number of teeth)		Z12	Z15	Z19	Z24	Z28	Z36
W_{spr}	mm	20.0	20.0	20.0	20.0	20.0	20.0
	inch	0.79	0.79	0.79	0.79	0.79	0.79
D_0	mm	50.0	62.3	78.7	99.2	115.7	148.7
	inch	1.97	2.45	3.10	3.91	4.56	5.85
A_{max}	mm	21.3	27.4	35.6	45.9	54.1	70.6
	inch	0.84	1.08	1.40	1.81	2.13	2.78
A_{min}	mm	20.5	26.8	35.1	45.5	53.7	70.3
	inch	0.81	1.06	1.38	1.79	2.11	2.77

Shaft bores (● = Round, ■ = Square; ❍ or ❑ = mold to order)

20	mm	●					
25	mm		● / ■		● / ❑	●	
30	mm				●		
40	mm			■	■	■	■
60	mm						■
0.75	inch	●					
1	inch		● / ■		●	●	
1.25	inch				●		
1.5	inch			■	■	■	■
2.5	inch						■

Material: PA, Color: LG

LG (Light gray)

All measurements and tolerances apply at 21 °C.
All imperial dimensions (inches) are rounded off.
For detailed sprocket and shaft dimensions see appendix 6.3
Number of sprockets (sprocket spacing distance) see chapter 3.2

S14-0 FLT/NCL PMC

No cling surface to improve release of wet and sticky products and Flat top surface for dry products

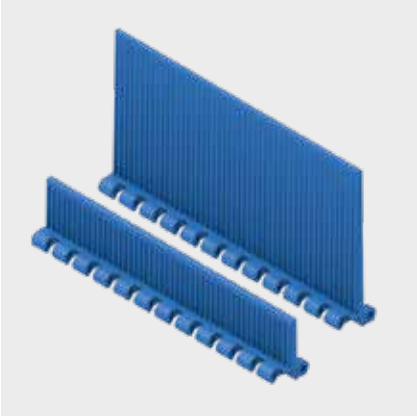

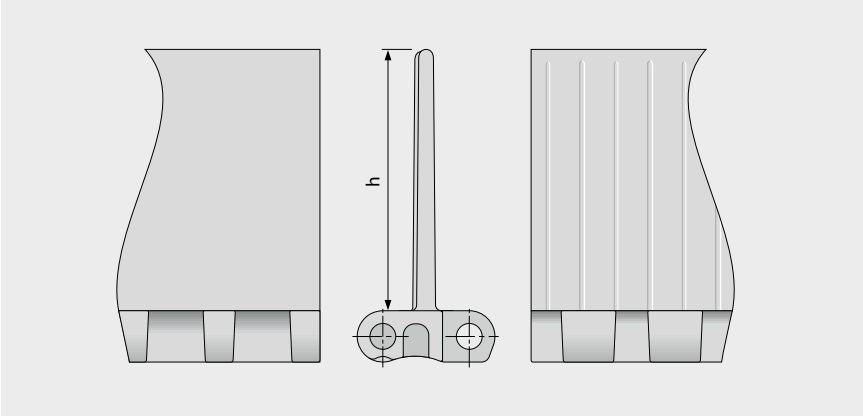

Basic data

Material	Color	Height (h)	
		25 mm 1 inch	76 mm 3 inch
PE	BL	●	mold to order
PE	WT	●	mold to order
POM	BL	●	●
POM	WT	mold to order	mold to order
PP	BL	●	●
PP	WT	●	mold to order

Molded width: 152 mm (6.0 in)

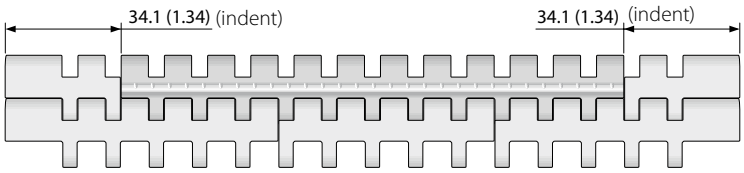

Standard configuration S14-0 PMC

BL (Blue), WT (White)

All measurements and tolerances apply at 21 °C; for temperature deviations please see Prolink manual chapter 4.4 "Temperature influence".
All imperial dimensions (inches) are rounded off.
Note: Use of accessory in a belt may impact on the minimum design radii. Please see chapter 6.3 for further information.

SERIES 14 | **PRR**

Straight running belt | Pitch 12.7 mm (0.50 in)

S14-25 PRR | Pin Retained Rollers

For applications where low back pressure accumulation or product separation is required

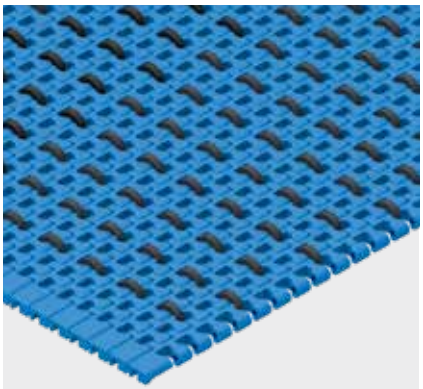

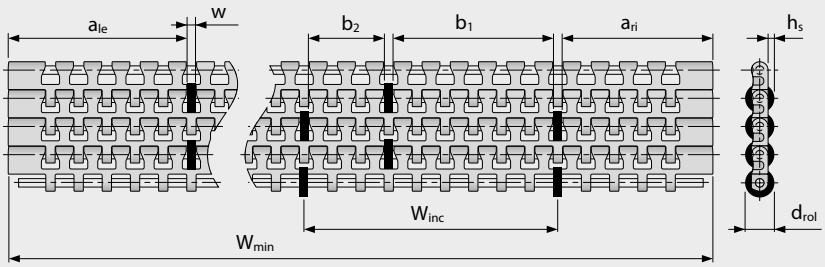

- For low back pressure wearstrips are to be positioned between the rollers
- For product separation the wear-strips are to be positioned below the rollers
- For all materials and surfaces
- Rollers available in POM BK

Dimensions

w	3.9 mm (0.15 in)	Roller cut out width
h_s	2.25 mm (0.09 in)	Height of rollers above surface
d_{rol}	13.2 mm (0.52 in)	Roller diameter
a	see config.	Indent of roller
b	see config.	Roller distance
s	n x s_{min}	Roller spacing in travel direction (standard: n = 1)
s_{min}	12.7 mm (0.5 in)	Min. roller spacing in travel direction
W_{inc}	see config.	Width increment
W_{min}	see config.	Min. belt width
W_B		Belt width
n_{rol}		Number of rollers across belt width

Allowable belt pull

To determine admissible belt pull calculate effective belt width $W_{B,ef}$ by

$W_{B,ef} = W_B - (w \times n_{rol})$

Example: W_B = 432 mm (17.0 in); w = 3.9 mm (0.15 in); n_{rol} = 7

$W_{B,ef}$ = 432 – (3.9 x 7) = 404.7 mm

$W_{B,ef}$ = 17 – (0.15 x 7) = 16 in

Note: Sprocket must not be placed inline with rollers. Deviation in roller spacing possible, please get in contact to customer service. Coefficient of friction between belt and conveyed product in accumulation mode μ_{acc} = 0.04, I.e. the accumulation pressure is approx. 4 % of the weight of the backed up product.

All measurements and tolerances apply at 21 °C; for temperature deviations please see Prolink manual chapter 4.4 “Temperature influence”.
All imperial dimensions (inches) are rounded off.
Note: Use of accessory in a belt may impact on the minimum design radii. Please see chapter 6.3 for further information.

MOVEMENT SYSTEMS

SERIES 14 | **PRR**

Straight running belt | Pitch 12.7 mm (0.50 in)

siegling prolink
modular belts

S14-25 PRR | Pin Retained Rollers

Standard configurations and main data

	Min. belt width – W_{min}		Width increment – W_{inc}		Roller distance – b		Indent of roller – a left		Indent of roller – a right		Roller/m² (e.g. 18 in belt width)
	[mm]	[in]	[mm]	[in]	[mm]	[in]	[mm]	[in]	[mm]	[in]	
Config. 1	228.6	9	114.3	4.5	76.2/38.1	3/1.5	67.9	2.67	80.6	3.17	600
Config. 2	127	5	50.8	2	25.4	1	42	1.65	55	2.17	1400
Config. 3	127	5	76.2	3	38.1	1.5	42	1.65	42	1.65	990

Configuration 1

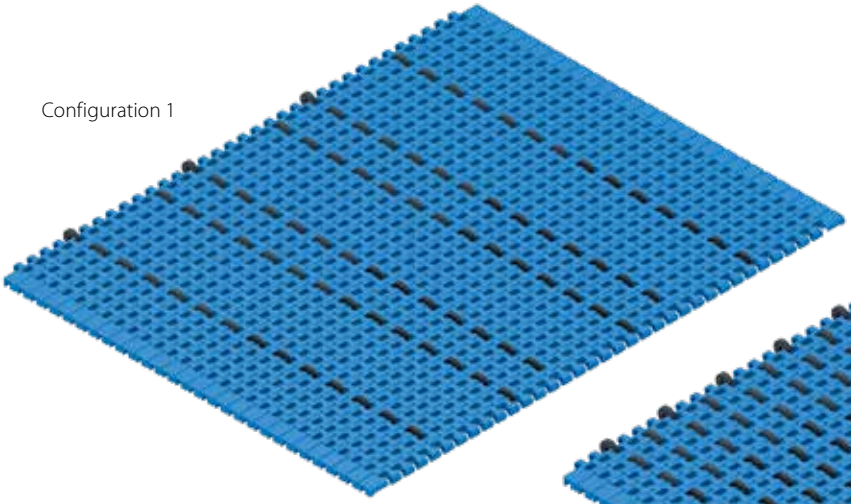

Configuration 2

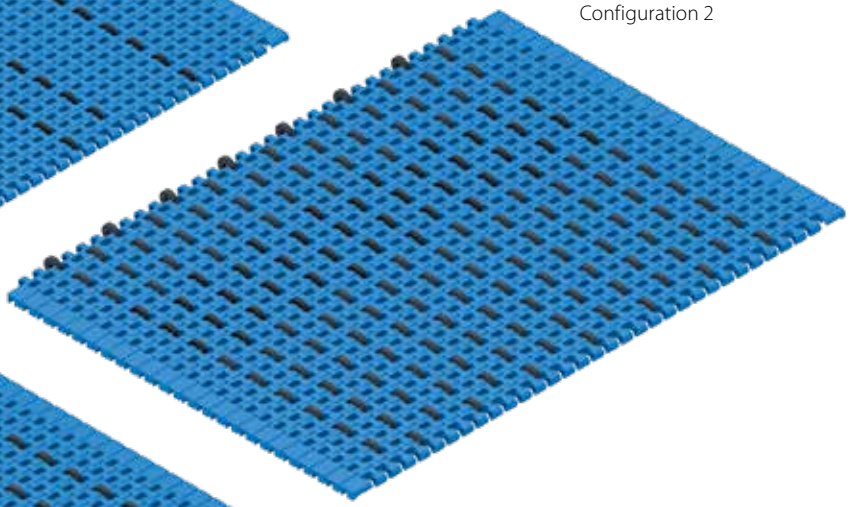

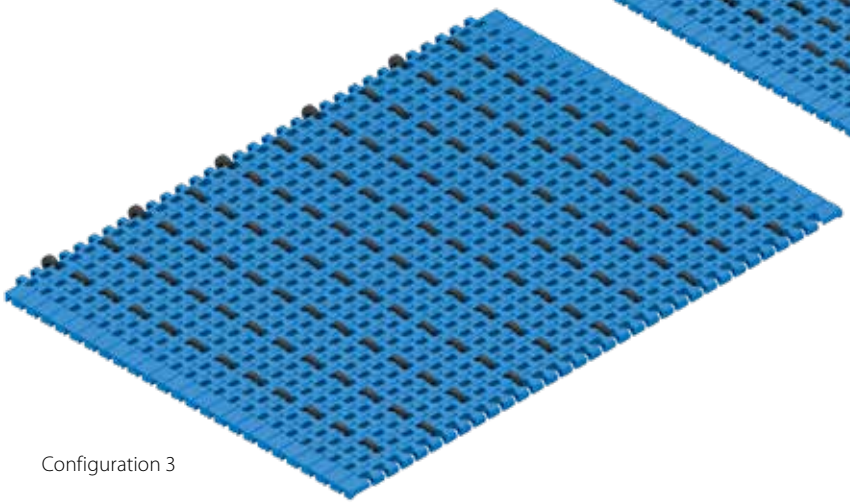

Configuration 3

Forbo
MOVEMENT SYSTEMS

LEGEND

① Series
S1 … S19

② Open area/Sprocket size
Percentage open area Format: xx E.g. 20 = 20 %
For sprockets: number of teeth Format: "Z"xx E.g. Z12 = 12 teeth

③ Surface pattern	
BSL	Base module for slider
CTP	Cone top
CUT	Curved top
FLT	Flat top (smooth)
FRT-OG	Friction top without High Grip insert
FRT(X)	Friction top (Design X)
GRT	Grid top
HDK	High Deck
LRB	Lateral rib
MOD	Modified module shape
NCL	No cling
NPY	Negative pyramid
NSK	Non skid
NSK2	Non skid, nonwoven variant
NTP	Nub top (round studs)
PRR	Pin Retained Rollers
RAT	Radius top
RRB	Raised rib
RSA	Reduced surface area
RTP	Roller top
SRS	Slip-resistant surface

④ Type	
BPU	Bucket profile
CAP	Pin lock & belt edge sealing
CCW	Counter clockwise
CLP	Clip
CM	Center module
CW	Clockwise
FPL	Finger plate
HDT	Hold Down Tab
IDL	Idler
INS	Insert
PIN	Coupling rod
PMC	Profile module center
PMU	Profile module universal
PSP	ProSnap
PSU-0	Prof. scoop uni. closed
PSU-X	Prof. scoop uni. x% open
RI	High Grip insert
REL	Reinforcement Link (SS)
ROL	Rollers
RTR	Retaining ring
SG	Module with sideguard
SGL	Side guard, left
SGR	Side guard, right
SLI	Slider
SMA	Side module, A side
SMB	Side module, B side
SML	Side module, left
SMR	Side module, right
SMT	Side module, tight radius
SMU	Side module, universal/both sides
SPR	Sprocket
SPR-SP	Split sprocket, 2-part
SSL	Self stacker side module, left
SSR	Self stacker side module, right
TPL	Turning panel, left
TPR	Turning panel, right
UM	Universal module
WSC	Wheel Stopper Center
WSS	Wheel Stopper Side

⑤ Style	
1.6	1.6 collapse factor
1.7	1.7 collapse factor
2.2	2.2 collapse factor
2.2 G	2.2 collapse factor, guided
A90	Angle 90° to conveying direction
BT	Bearing tab
DR	Double row sprocket
F1, F2, F3 …	Collapse factor modules
G	Guided
GT	Guiding tabs
HD	Hold Down
HR	Hard removable pin
Ixx	xx = indent in mm
RG	Reversed guided
SG	Side guard
SP	Split sprocket
ST	Strong
V2	Version 2 indicates a design update

⑥ Material	
PA	Polyamide
PA-FR	Polyamide flame retadant
PA-FRHC	Polyamide, flame retadant, high conductive
PA-HT	Polyamide high temperature
PBT	Polybutylenterephthalate
PE	Polyethylene
PE-I	PE impact resistant
PE-MD	PE metal detectable
PK	Wear & impact improved polymer
PLX	Special PK for pins with small diameter – higher stiffness
POM	Polyoxymethylene (Polyacetal)
POM-CR	POM cut resistant
POM-HC	POM highly conductive
POM-MD	POM metal detectable
POM-PE	POM side modules + PE center modules
POM-PP	POM side modules + PP center modules
PP	Polypropylene
PP-MD	PP metal detectable
PP-SW	PP steam and hot water resistant
PXX-HC	Self-extinguishing highly conductive material
R1	TPE 80 Shore A, PP
R2	EPDM 80 Shore A, vulcanized
R3	TPE 70 Shore A, POM
R4	TPE 86 Shore A, PP
R5	TPE 52 Shore A, PP
R6	TPE 63 Shore A, POM
R7	TPE 50 Shore A, PP
R8	TPE 55 Shore A, PE
R11	TPE 50 Shore A, POM
SER	Self-extinguishing TPE
SS	Stainless steel
SSS	Stainless steel acid resistant
TPC1	Themoplastic Copolyester
-HA	Supports the HACCP concept
HW	High Wear resistant material

⑦ Color*	
AT	Anthracite
BG	Beige
BK	Black
BL	Blue
DB	Dark blue
GN	Green
LB	Light blue
LG	Light gray
OR	Orange
RE	Red
TQ	Turquoise
UC	Uncolored
WT	White
YL	Yellow

⑧ Height/Diameter/ Bore size and style
Height in mm (in) Format: Hxxx Pin diameter in mm (in) Format: Dxxx
Bore size: SQ (= square) or RD (= round) either in mm or inches Format: SQxxMM or RDxxIN

⑨ Length/Width
Pins Length in mm (in) Format: Lxxx Module width in mm (in) Format: Wxxx REL in mm one decimal Format: Wx.x

* For each series' standard colors please refer to the table of materials for each belt (chapter 1.2). A number of other colors are available on request. Colors can vary from the original due to the print, production processes or material used.