EXCERPT FROM PROLINK ENGINEERING MANUAL

05/26 (Ref-No. 888)



Forbo Siegling GmbH
Lilienthalstraße 6/8, D-30179 Hannover
Telefon +49 511 6704 0
www.forbo-siegling.com, siegling@forbo.com

Ref. no. 888-1_1.2_S18

SERIES 18 | **OVERVIEW**

siegling prolink
modular belts

Side flexing and spiral belts | Pitch 25.4 mm (1 in)

Belts for light to medium-duty food and non-food applications

Side view scale 1:1

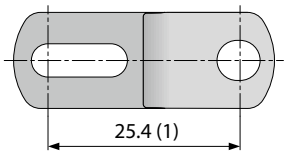

Design characteristics

- All plastic light weight belt suitable for both straight and radius conveying
- 44 % open area for excellent air circulation and drainage
- Narrow grid structure of the belt ensures secure handling of even small products
- High curve belt pull capacity offering improved capacity and reliability
- Easy to clean and suitable for conveying of food including direct food contact
- Superior lateral stiffness and rigidity for an all plastic belt

Basic data

Pitch	25.4 mm (1 in)
Belt width min.	149.9 mm (5.9 in)
Belt width max.	1219 mm (48 in)
Width increments	12.7 mm (0.5 in)
Hinge pins	4.2 mm (0.17 in) made of plastic (PLX, PP). One-piece up to a belt width of 1219 mm (48 in).

Available surface pattern and opening area

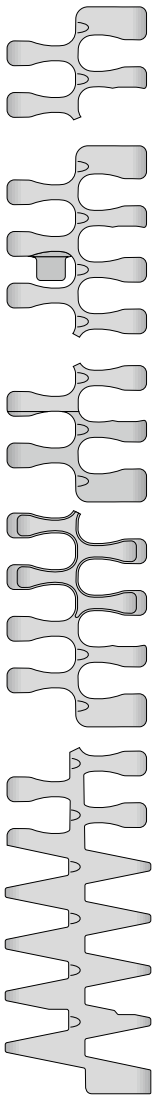

S18-44 GRT (CW/CCW) 2.2
Open (44 %), lattice-shaped surface

S18-44 GRT (CW/CCW) 2.2 G
Open (44 %), lattice-shaped surface and Hold Down Tabs

S18-44 HDK (CW/CCW) 2.2
Open (44 %), lattice-shaped surface and High Deck

S18-44 FRT1 (CW/CCW) 2.2
Open (44 %), surface with friction top

S18-44 GRT (CW/CCW) 1.7
Open (44 %), lattice-shaped surface

S18-44 GRT CW 2.2/1.7
S18-44 GRT CCW 1.7/2.2
Open (44 %), lattice-shaped surface
CW = Clockwise (right hand curve)
CCW = Counter Clockwise (left hand curve)
(picture shows CCW)

Sprockets
in different sizes with round or square bore



Profiles
for incline conveyors

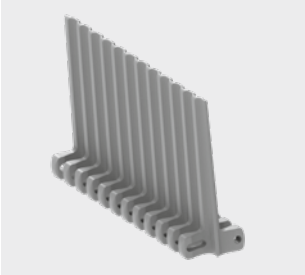

Side guard
as lane divider to separate products



SERIES 18 | **BELT TYPES**

Side flexing and spiral belt | Pitch 25.4 mm (1 in) | $C_C = 2.2$

S18-44 GRT (CW/CCW) 2.2 | 44 % Opening | Grid top

Open area (44%) for excellent air circulation and drainage | 42% contact area (Largest opening: Ø = 7.9 mm/0.31 in) | Lattice-shape surface | Collapse factor (C_C) = 2.2 | Running direction clockwise (cw) and counter clockwise (ccw)

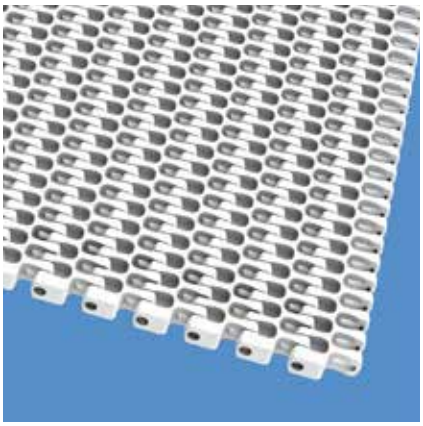

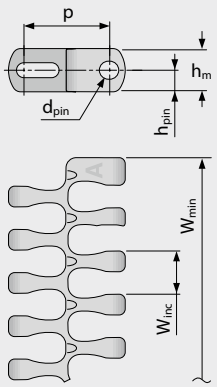

Variant specific dimensions [mm (in)]

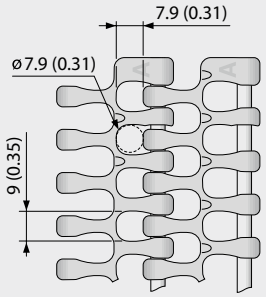

Belt dimensions

	p	d_{pin}	h_m	h_{pin}	h_s	W_{min}	W_{inc}	W_{tol}	Minimum flex radii[1]				
	Pitch	Pin Ø	Thickness	Pin position	Height	Width min.	Width Increment	Width tolerance [%]	r1 $C_c \times W_B$	r2	r3	r4	r5
mm	25.4	4.2	12.7	6.4	0.0	149.9	12.7	±0.2	2.2 x W_B	25.4	50.8	76.2	25.4
inch	1.0	0.17	0.5	0.25	0.0	5.9	0.5	±0.2	2.2 x W_B	1.0	2.0	3.0	1.0

W_B = Belt width, further information regarding r1 see page III-31

Available standard materials [3]

Belt		Pin		Nominal belt pull, straight		Nominal belt pull, curve		Weight		Width deviation	Temperature		Certificates[2]		
Material	Color	Material	Color	[N/mm]	[lb/ft]	[N]	[lb]	[kg/m²]	[lb/ft²]	[%]	[°C]	[°F]	FDA	EU	MHLW
POM-CR	BL	PLX	BL	30	2056	1600	360	8.4	1.72	-0.1	-45/90	-49/194	●	●	●
POM-CR	WT	PLX	BL	30	2056	1600	360	8.4	1.72	-0.1	-45/90	-49/194	●	●	●
PP	BL	PLX	BL	18	1233	1000	225	5.8	1.19	0.5	5/100	41/212	●	●	●
PP	WT	PLX	BL	18	1233	1000	225	5.8	1.19	0.5	5/100	41/212	●	●	●
PP	BL	PP	WT	16	1096	600	135	5.5	1.13	0.5	5/100	41/212	●	●	●
PP	WT	PP	WT	16	1096	600	135	5.5	1.13	0.5	5/100	41/212	●	●	●
Mold to order belts															
PA*	BL	PLX	BL	25	1713	1500	337	6.9	1.41	0.85	-40/120	-40/248	●	●	●

* Values valid for dry applications (RH < 50 %). Belts in PA material will absorb water in wet environments, causing them to expand and reduce the nominal belt pull capacity.

BL (Blue), WT (White)

All measurements and tolerances apply at 21 °C; for temperature deviations please see Prolink manual chapter 4.4 "Temperature influence".
All imperial dimensions (inches) are rounded off.

[1] Flex radii: r1 = side flex, r2 = front flex on roller, r3 = back flex on load bearing roller, r4 = back flex on Hold Down shoe, r5 = back flex on roller

[2] Complies with FDA 21 CFR | Complies with (EU) 10/2011 and (EC) 1935/2004 regulations regarding the raw materials used and the migration thresholds | Complies with Japanese MHLW Notification 370
● = available | – = not available | empty cells = not tested

[3] More materials and colors on request

SERIES 18 | **BELT TYPES**

siegling prolink
modular belts

Side flexing and spiral belt | Pitch 25.4 mm (1 in) | $C_C = 2.2$

S18-44 GRT (CW/CCW) 2.2 G | 44 % Opening | Grid top · guided

Open area (44%) for excellent air circulation and drainage | 42% contact area (Largest opening: Ø = 7.9 mm/0.31 in) | Lattice-shape surface and Hold Down Tabs | Allows utilization of the entire belt width | Collapse factor (C_c) = 2.2 | Running direction clockwise (cw) and counter clockwise (ccw)

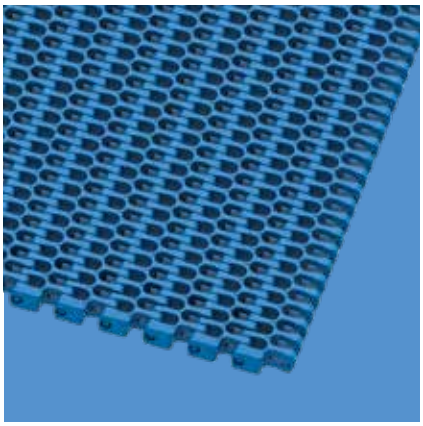

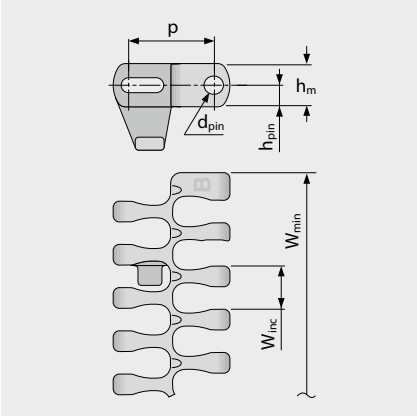

Variant specific dimensions [mm (in)]

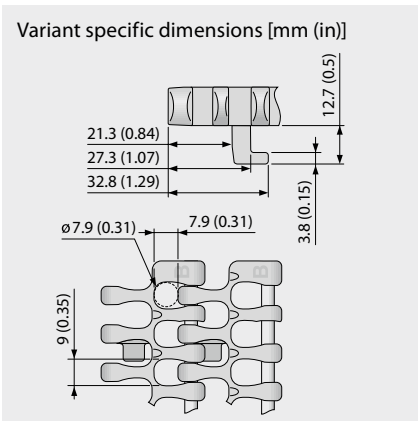

Belt dimensions

	p	d_{pin}	h_m	h_{pin}	h_s	W_{min}	W_{inc}	W_{tol}	Minimum flex radii[1]				
	Pitch	Pin Ø	Thickness	Pin position	Height	Width min.	Width Increment	Width tolerance [%]	r1 $C_c \times W_B$	r2	r3	r4	r5
mm	25.4	4.2	12.7	6.4	0.0	149.9	12.7	±0.2	2.2 x W_B	25.4	50.8	76.2	25.4
inch	1.0	0.17	0.5	0.25	0.0	5.9	0.5	±0.2	2.2 x W_B	1.0	2.0	3.0	1.0

W_B = Belt width, further information regarding r1 see page III-31

Available standard materials [3]

Belt		Pin		Nominal belt pull, straight		Nominal belt pull, curve**		Weight		Width deviation	Temperature		Certificates[2]		
Material	Color	Material	Color	[N/mm]	[lb/ft]	[N]	[lb]	[kg/m²]	[lb/ft²]	[%]	[°C]	[°F]	FDA	EU	MHLW
POM-CR	BL	PLX	BL	30	2056	1600	360	8.4	1.72	-0.1	-45/90	-49/194	●	●	●
POM-CR	WT	PLX	BL	30	2056	1600	360	8.4	1.72	-0.1	-45/90	-49/194	●	●	●
PP	BL	PLX	BL	18	1233	1000	225	5.8	1.19	0.5	5/100	41/212	●	●	●
PP	WT	PLX	BL	18	1233	1000	225	5.8	1.19	0.5	5/100	41/212	●	●	●
Mold to order belts															
PA*	BL	PLX	BL	25	1713	1500	337	6.9	1.41	0.85	-40/120	-40/248	●	●	●

* Values valid for dry applications (RH < 50 %). Belts in PA material will absorb water in wet environments, causing them to expand and reduce the nominal belt pull capacity.

** will be reduced by G-tab guiding (see chapter 3.3 conveyor layouts)

BL (Blue), WT (White)

All measurements and tolerances apply at 21 °C; for temperature deviations please see Prolink manual chapter 4.4 "Temperature influence".
All imperial dimensions (inches) are rounded off.

[1] Flex radii: r1 = side flex, r2 = front flex on roller, r3 = back flex on load bearing roller, r4 = back flex on Hold Down shoe, r5 = back flex on roller
Attention: Restrictions on sprocket size and corresponding shaft options – please check sprocket data sheet

[2] Complies with FDA 21 CFR | Complies with (EU) 10/2011 and (EC) 1935/2004 regulations regarding the raw materials used and the migration thresholds | Complies with Japanese MHLW Notification 370
● = available | – = not available | empty cells = not tested

[3] More materials and colors on request

Forbo
MOVEMENT SYSTEMS

SERIES 18 | **BELT TYPES**

siegling prolink
modular belts

Side flexing and spiral belt | Pitch 25.4 mm (1 in) | $C_C = 2.2$

S18-44 HDK (CW/CCW) 2.2 | 44 % Opening | High Deck

Open area (44 %) for excellent air circulation and drainage | 42 % contact area (Largest opening: Ø = 7.9 mm/0.31 in) | Lattice-shape surface | Collapse factor (C_c) = 2.2 | Allows utilization of the entire belt width and beyond | Running direction clockwise (cw) and counter clockwise (ccw)

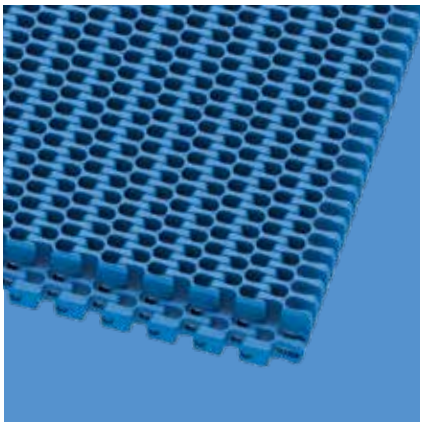

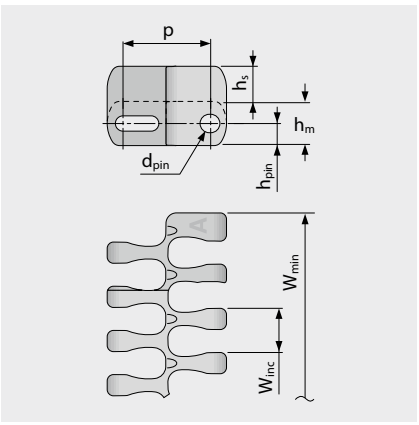

Variant specific dimensions [mm (in)]

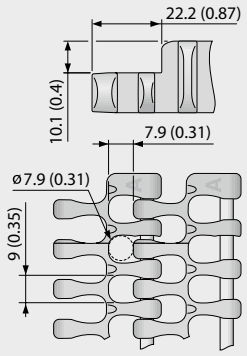

Belt dimensions

	p	d_{pin}	h_m	h_{pin}	h_s	W_{min}	W_{inc}	W_{tol}	Minimum flex radii[1]				
	Pitch	Pin Ø	Thickness	Pin position	Height	Width min.	Width Increment	Width tolerance [%]	r1 $C_c \times W_B$	r2	r3	r4	r5
mm	25.4	4.2	12.7	6.4	10.1	149.9	12.7	±0.2	2.2 x W_B	25.4	50.8	76.2	25.4
inch	1.0	0.17	0.5	0.25	0.4	5.90	0.5	±0.2	2.2 x W_B	1.0	2.0	3.0	1.0

W_B = Belt width, further information regarding r1 see page III-31

Available standard materials [3]

Belt		Pin		Nominal belt pull, straight		Nominal belt pull, curve		Weight		Width deviation	Temperature		Certificates[2]		
Material	Color	Material	Color	[N/mm]	[lb/ft]	[N]	[lb]	[kg/m²]	[lb/ft²]	[%]	[°C]	[°F]	FDA	EU	MHLW
PA*	BL	PLX	BL	25	1713	1500	337	12.6	2.58	0.85	-40/120	-40/248	●	●	●
POM-CR	BL	PLX	BL	30	2056	1600	360	15.5	3.17	-0.1	-45/90	-49/194	●	●	●
PP	BL	PLX	BL	18	1233	1000	225	10.3	2.11	0.5	5/100	41/212	●	●	●
PP	WT	PLX	BL	18	1233	1000	225	10.3	2.11	0.5	5/100	41/212	●	●	●
PP	BL	PP	WT	16	1096	800	180	10.2	2.09	0.5	5/100	41/212	●	●	●
PP	WT	PP	WT	16	1096	800	180	10.2	2.09	0.5	5/100	41/212	●	●	●
Mold to order belts															
POM-CR	WT	PLX	BL	30	2056	1600	360	15.5	3.17	-0.1	-45/90	-49/194	●	●	●

* Values valid for dry applications (RH < 50 %). Belts in PA material will absorb water in wet environments, causing them to expand and reduce the nominal belt pull capacity.

BL (Blue), WT (White)

All measurements and tolerances apply at 21 °C; for temperature deviations please see Prolink manual chapter 4.4 "Temperature influence".
All imperial dimensions (inches) are rounded off.

[1] Flex radii: r1 = side flex, r2 = front flex on roller, r3 = back flex on load bearing roller, r4 = back flex on Hold Down shoe, r5 = back flex on roller

[2] Complies with FDA 21 CFR | Complies with (EU) 10/2011 and (EC) 1935/2004 regulations regarding the raw materials used and the migration thresholds | Complies with Japanese MHLW Notification 370
● = available | – = not available | empty cells = not tested

[3] More materials and colors on request

Forbo
MOVEMENT SYSTEMS

SERIES 18 | **BELT TYPES**

Side flexing and spiral belt | Pitch 25.4 mm (1 in) | $C_C = 1.7$

S18-44 GRT (CW/CCW) 1.7 | 44 % Opening | Grid top

Open area (44 %) for excellent air circulation and drainage | 42 % contact area (Largest opening: Ø = 7.9 mm/0.31 in) | Lattice-shape surface | Collapse factor (C_C) = 1.7 | Running direction clockwise (cw) and counter clockwise (ccw)

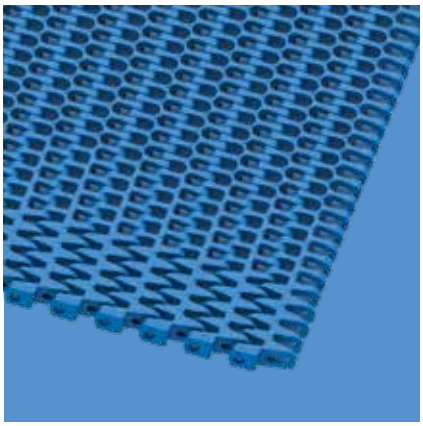

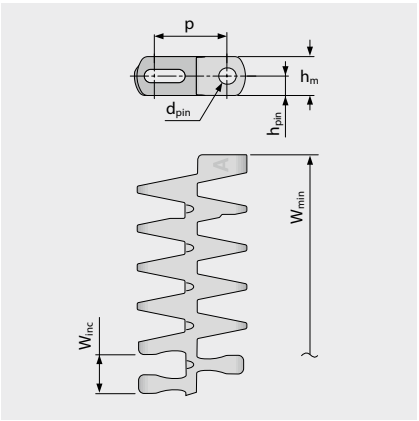

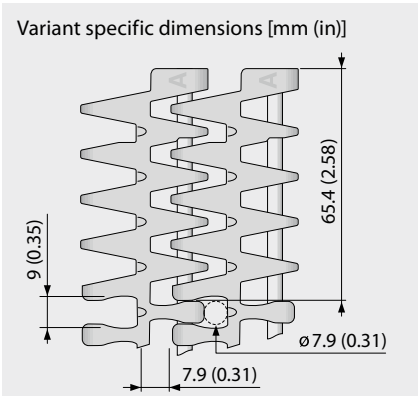

Belt dimensions

	p	d_{pin}	h_m	h_{pin}	h_s	W_{min}	W_{inc}	W_{tol}	Minimum flex radii[1]				
	Pitch	Pin Ø	Thickness	Pin position	Height	Width min.	Width Increment	Width tolerance [%]	r1 $C_c \times W_B$	r2	r3	r4	r5
mm	25.4	4.2	12.7	6.4	0.0	175.3	12.7	±0.2	1.7 x W_B	25.4	50.8	76.2	25.4
inch	1.0	0.17	0.5	0.25	0.0	6.9	0.5	±0.2	1.7 x W_B	1.0	2.0	3.0	1.0

W_B = Belt width, further information regarding r1 see page III-31

Available standard materials [3]

Belt		Pin		Nominal belt pull, straight		Nominal belt pull, belt width curve < 403 mm (15.88 in)		Nominal belt pull, belt width curve ≥ 403 mm (15.88 in)		Weight		Width deviation	Temperature		Certificates[2]		
Material	Color	Material	Color	[N/mm]	[lb/ft]	[N]	[lb]	[N]	[lb]	[kg/m²]	[lb/ft²]	[%]	[°C]	[°F]	FDA	EU	MHLW
POM-CR	BL	PLX	BL	25	1713	700	157	900	202	8.4	1.72	-0.1	-45/90	-49/194	●	●	●
POM-CR	WT	PLX	BL	25	1713	700	157	900	202	8.4	1.72	-0.1	-45/90	-49/194	●	●	●
PP	BL	PLX	BL	18	1233	400	90	700	157	5.8	1.19	0.5	5/100	41/212	●	●	●
PP	WT	PLX	BL	18	1233	400	90	700	157	5.8	1.19	0.5	5/100	41/212	●	●	●
PP	BL	PP	WT	16	1096	400	90	600	135	5.5	1.13	0.5	5/100	41/212	●	●	●
PP	WT	PP	WT	16	1096	400	90	600	135	5.5	1.13	0.5	5/100	41/212	●	●	●

BL (Blue), WT (White)

All measurements and tolerances apply at 21 °C; for temperature deviations please see Prolink manual chapter 4.4 "Temperature influence".
All imperial dimensions (inches) are rounded off.

[1] Flex radii: r1 = side flex, r2 = front flex on roller, r3 = back flex on load bearing roller, r4 = back flex on Hold Down shoe, r5 = back flex on roller

[2] Complies with FDA 21 CFR | Complies with (EU) 10/2011 and (EC) 1935/2004 regulations regarding the raw materials used and the migration thresholds | Complies with Japanese MHLW Notification 370

● = available | – = not available | empty cells = not tested

[3] More materials and colors on request

Side flexing and spiral belt | Pitch 25.4 mm (1 in) | $C_C = 2.2$

S18-44 FRT1 (CW/CCW) 2.2 | 44 % Opening | Friction top (Design 1)

Open area (44%) with integrated friction pads (FRT1) for high grip | 42% contact area (Largest opening: Ø = 7.9 mm/0.31 in) | Standard version without FRT-pads on belt edge (27.5 mm/1.08 in indent) | Collapse factor (C_C) = 2.2 | Running direction clockwise (cw) and counter clockwise (ccw)

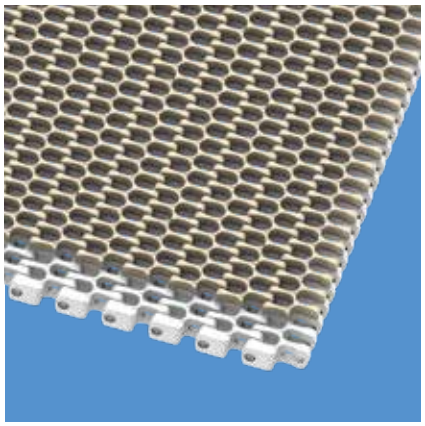

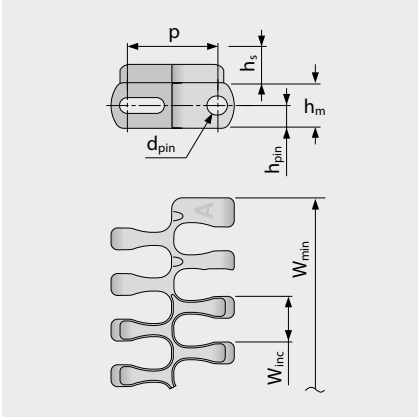

Variant specific dimensions [mm (in)]

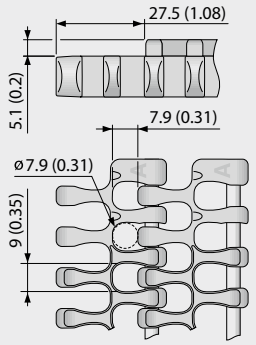

Belt dimensions

	p	d_{pin}	h_m	h_{pin}	h_s	W_{min}	W_{inc}	W_{tol}	Minimum flex radii[1]			
	Pitch	Pin Ø	Thickness	Pin position	Height	Width min.	Width Increment	Width tolerance [%]	r1 $C_c \times W_B$	r2	r3	r4	r5
mm	25.4	4.2	12.7	6.4	5.1	149.9	12.7	±0.2	2.2 x W_B	25.4	50.8	76.2	25.4
inch	1.0	0.17	0.5	0.25	0.20	5.90	0.5	±0.2	2.2 x W_B	1.0	2.0	3.0	1.0

W_B = Belt width, further information regarding r1 see page III-31

Available standard materials [3]

Belt		Pin		Rubber		Nominal belt pull, straight		Nominal belt pull, curve		Weight		Width deviation	Temperature		Certificates[2]		
Material	Color	Material	Color	Material	Color	[N/mm]	[lb/ft]	[N]	[lb]	[kg/m²]	[lb/ft²]	[%]	[°C]	[°F]	FDA	EU	MHLW
PP	BL	PLX	BL	R7	BL	18	1233	1000	225	8.80	1.80	0.5	5/100	41/212	●	●	
PP	WT	PLX	BL	R7	BG	18	1233	1000	225	8.80	1.80	0.5	5/100	41/212	●	●	
PP	BL	PP	WT	R7	BL	16	1096	600	135	8.60	1.76	0.5	5/100	41/212	●	●	
PP	WT	PP	WT	R7	BG	16	1096	600	135	8.60	1.76	0.5	5/100	41/212	●	●	

BG (Beige), BL (Blue), WT (White)

All measurements and tolerances apply at 21 °C; for temperature deviations please see Prolink manual chapter 4.4 "Temperature influence".
All imperial dimensions (inches) are rounded off.

[1] Flex radii: r1 = side flex, r2 = front flex on roller, r3 = back flex on load bearing roller, r4 = back flex on Hold Down shoe, r5 = back flex on roller

[2] Complies with FDA 21 CFR | Complies with (EU) 10/2011 and (EC) 1935/2004 regulations regarding the raw materials used and the migration thresholds | Complies with Japanese MHLW Notification 370
● = available | – = not available | empty cells = not tested

[3] More materials and colors on request

S18 COMBO | **BELT TYPES**

siegling prolink
modular belts

Side flexing and spiral belt | Pitch 25.4 mm (1 in) | $C_C = 1.7$

S18-44 GRT CW 2.2/1.7 | 44 % Opening | Grid top | Clockwise or right hand curve

Combination of high belt pull capacity and small radii in one directional curve layouts | Open area (44 %) for excellent air circulation and drainage | 42 % contact area (Largest opening: Ø = 7.9 mm/0.31 in) | Lattice-shape surface | Collapse factor (C_C) = 1.7 | Running direction clockwise (cw) and counter clockwise (ccw)

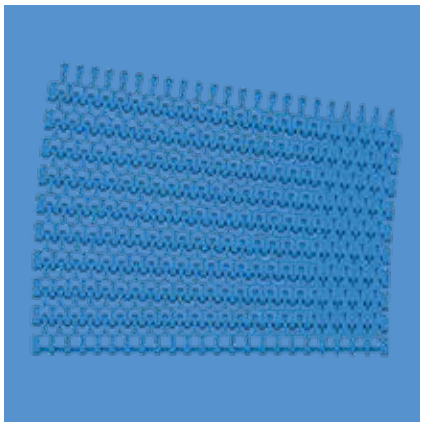

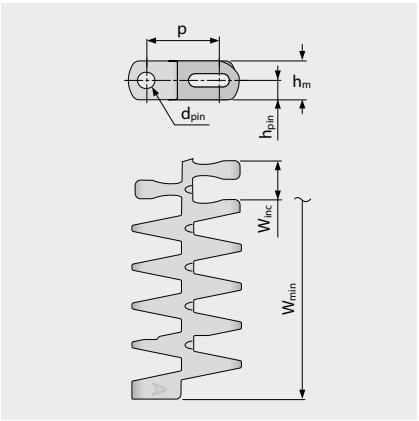

Variant specific dimensions [mm (in)]

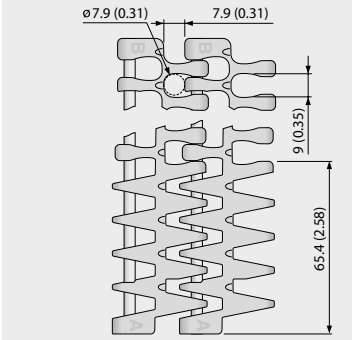

Belt dimensions

	p	d_{pin}	h_m	h_{pin}	h_s	W_{min}	W_{inc}	W_{tol}	Minimum flex radii[1]				
	Pitch	Pin Ø	Thickness	Pin position	Height	Width min.	Width Increment	Width tolerance [%]	r1 $C_c \times W_B$	r2	r3	r4	r5
mm	25.4	4.2	12.7	6.4	0.0	149.9	12.7	±0.2	1.7 x W_B	25.4	50.8	76.2	25.4
inch	1.0	0.17	0.5	0.25	0.0	5.90	0.5	±0.2	1.7 x W_B	1.0	2.0	3.0	1.0

W_B = Belt width, further information regarding r1 see page III-31

Available standard materials[3]

Belt		Pin		Nominal belt pull, straight		Nominal belt pull, curve		Weight		Width deviation	Temperature		Certificates[2]		
Material	Color	Material	Color	[N/mm]	[lb/ft]	[N]	[lb]	[kg/m²]	[lb/ft²]	[%]	[°C]	[°F]	FDA	EU	MHLW
POM-CR	BL	PLX	BL	30	2056	1600	360	8.4	1.72	-0.1	-45/90	-49/194	●	●	●
POM-CR	WT	PLX	BL	30	2056	1600	360	8.4	1.72	-0.1	-45/90	-49/194	●	●	●
PP	BL	PLX	BL	18	1233	1000	225	5.8	1.19	0.5	5/100	41/212	●	●	●
PP	WT	PLX	BL	18	1233	1000	225	5.8	1.19	0.5	5/100	41/212	●	●	●
PP	BL	PP	WT	16	1096	600	135	5.5	1.13	0.5	5/100	41/212	●	●	●
PP	WT	PP	WT	16	1096	600	135	5.5	1.13	0.5	5/100	41/212	●	●	●

BL (Blue), WT (White)

All measurements and tolerances apply at 21 °C; for temperature deviations please see Prolink manual chapter 4.4 "Temperature influence".
All imperial dimensions (inches) are rounded off.

[1] Flex radii: r1 = side flex, r2 = front flex on roller, r3 = back flex on load bearing roller, r4 = back flex on Hold Down shoe, r5 = back flex on roller

[2] Complies with FDA 21 CFR | Complies with (EU) 10/2011 and (EC) 1935/2004 regulations regarding the raw materials used and the migration thresholds | Complies with Japanese MHLW Notification 370

● = available | – = not available | empty cells = not tested

[3] More materials and colors on request

Forbo
MOVEMENT SYSTEMS

S18 COMBO | **BELT TYPES**

siegling prolink
modular belts

Side flexing and spiral belt | Pitch 25.4 mm (1 in) | $C_C = 1.7$

S18-44 GRT CCW 1.7/2.2 | 44 % Opening | Grid top | Counter clockwise or left hand curve

Combination of high belt pull capacity and small radii in one directional curve layouts | Open area (44 %) for excellent air circulation and drainage | 42 % contact area (Largest opening: Ø = 7.9 mm/0.31 in) | Lattice-shape surface | Collapse factor (C_C) = 1.7 | Running direction clockwise (cw) and counter clockwise (ccw)

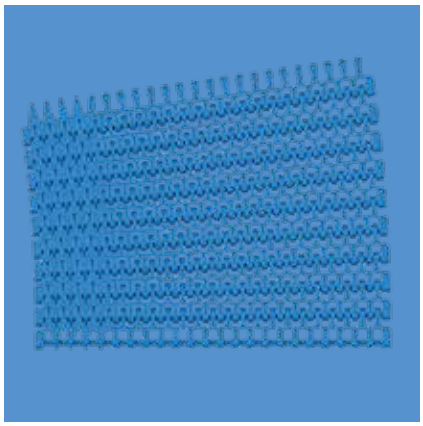

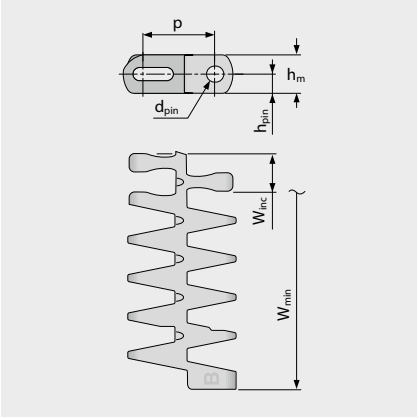

Variant specific dimensions [mm (in)]

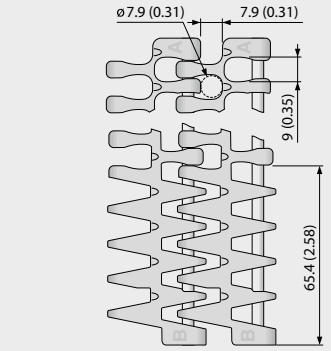

Belt dimensions

	p	d_{pin}	h_m	h_{pin}	h_s	W_{min}	W_{inc}	W_{tol}	Minimum flex radii[1]				
	Pitch	Pin Ø	Thickness	Pin position	Height	Width min.	Width Increment	Width tolerance [%]	r1 $C_c \times W_B$	r2	r3	r4	r5
mm	25.4	4.2	12.7	6.4	0.0	149.9	12.7	±0.2	1.7 x W_B	25.4	50.8	76.2	25.4
inch	1.0	0.17	0.5	0.25	0.0	5.90	0.5	±0.2	1.7 x W_B	1.0	2.0	3.0	1.0

W_B = Belt width, further information regarding r1 see page III-31

Available standard materials[3]

Belt		Pin		Nominal belt pull, straight		Nominal belt pull, curve		Weight		Width deviation	Temperature		Certificates[2]		
Material	Color	Material	Color	[N/mm]	[lb/ft]	[N]	[lb]	[kg/m²]	[lb/ft²]	[%]	[°C]	[°F]	FDA	EU	MHLW
POM-CR	BL	PLX	BL	30	2056	1600	360	8.4	1.72	-0.1	-45/90	-49/194	●	●	●
POM-CR	WT	PLX	BL	30	2056	1600	360	8.4	1.72	-0.1	-45/90	-49/194	●	●	●
PP	BL	PLX	BL	18	1233	1000	225	5.8	1.19	0.5	5/100	41/212	●	●	●
PP	WT	PLX	BL	18	1233	1000	225	5.8	1.19	0.5	5/100	41/212	●	●	●
PP	BL	PP	WT	16	1096	600	135	5.5	1.13	0.5	5/100	41/212	●	●	●
PP	WT	PP	WT	16	1096	600	135	5.5	1.13	0.5	5/100	41/212	●	●	●

BL (Blue), WT (White)

All measurements and tolerances apply at 21 °C; for temperature deviations please see Prolink manual chapter 4.4 "Temperature influence".
All imperial dimensions (inches) are rounded off.

[1] Flex radii: r1 = side flex, r2 = front flex on roller, r3 = back flex on load bearing roller, r4 = back flex on Hold Down shoe, r5 = back flex on roller

[2] Complies with FDA 21 CFR | Complies with (EU) 10/2011 and (EC) 1935/2004 regulations regarding the raw materials used and the migration thresholds | Complies with Japanese MHLW Notification 370

● = available | – = not available | empty cells = not tested

[3] More materials and colors on request

Forbo
MOVEMENT SYSTEMS

S18 SPR | Sprockets

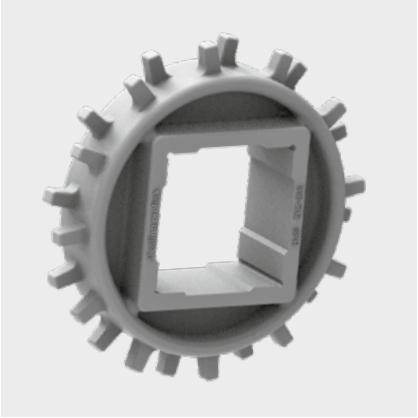

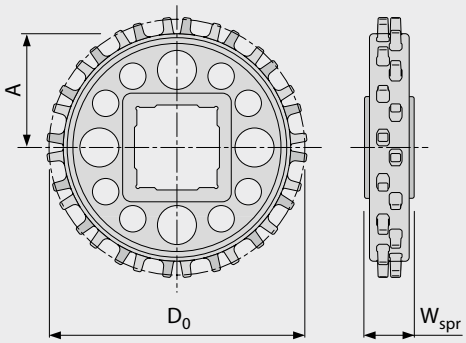

Main dimensions

Sprocket size (Number of teeth)		Z6	Z9	Z12	Z16	Z20
W_{spr}	mm	20.0	25.0	25.0	25.0	25.0
	inch	0.79	0.98	0.98	0.98	0.98
D_0	mm	50.6	74.1	97.9	129.9	162.0
	inch	1.99	2.92	3.85	5.11	6.38
A_{max}	mm	19.2	30.9	42.8	58.8	75.0
	inch	0.76	1.22	1.69	2.31	2.95
A_{min}	mm	16.6	29.0	41.3	57.7	74.1
	inch	0.65	1.14	1.63	2.27	2.92

Shaft bores (● = Round, ■ = Square; ❍ or ❑ = mold to order; * = not possible with G tab belts)

20	mm	●*				
25	mm		● / ■*	●	●	●
30	mm			●	●	●
40	mm			● / ■	● / ■	❍ / ■
0.75	inch	●*				
1	inch		● / ■*	●	●	●
1.25	inch			●	●	●
1.5	inch			❍ / ■	❍ / ■	❍ / ■

Material: PA, Color: LG

LG (Light gray)

All measurements and tolerances apply at 21 °C.
All imperial dimensions (inches) are rounded off.
For detailed sprocket and shaft dimensions see appendix 6.3
Number of sprockets (sprocket spacing distance) see chapter 3.2

S18-44 GRT PMC

Open version (44%) base module with "wave-like" profile for better release and higher stiffness

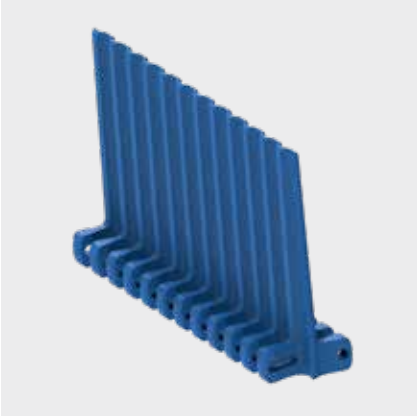

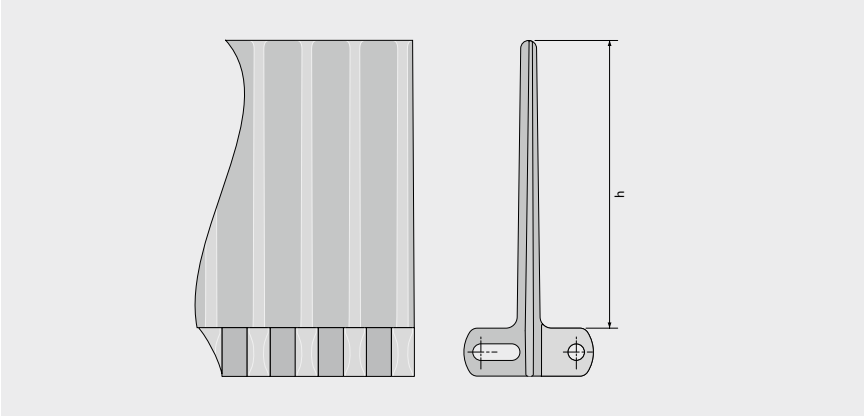

Basic data

Material	Color	Height (h)
		75 mm 3 inch
POM	BL	●
POM	WT	●
PP	BL	●
PP	WT	●

Molded width: 152 mm (6.0 in)

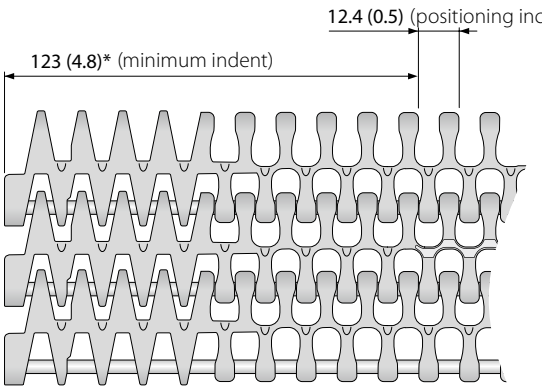

C_c 1.7

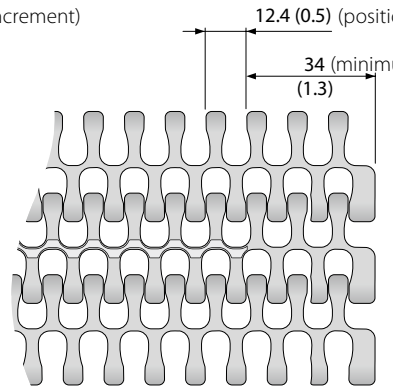

C_c 2.2

* indent of 67 mm (2.6 in) feasible, but influence to C_c possible

BL (Blue), WT (White)

All measurements and tolerances apply at 21 °C; for temperature deviations please see Prolink manual chapter 4.4 "Temperature influence".
All imperial dimensions (inches) are rounded off.
Note: Use of accessory in a belt may impact on the minimum design radii. Please see chapter 6.3 for further information.

SERIES 18 | **CONE TOP**

Side flexing and spiral belt | Pitch 25.4 mm (1 in)

siegling prolink
modular belts

S18-44 CTP

Open version (44%) base module for drainage with Cone Top (pointed studs) pattern for superior grip



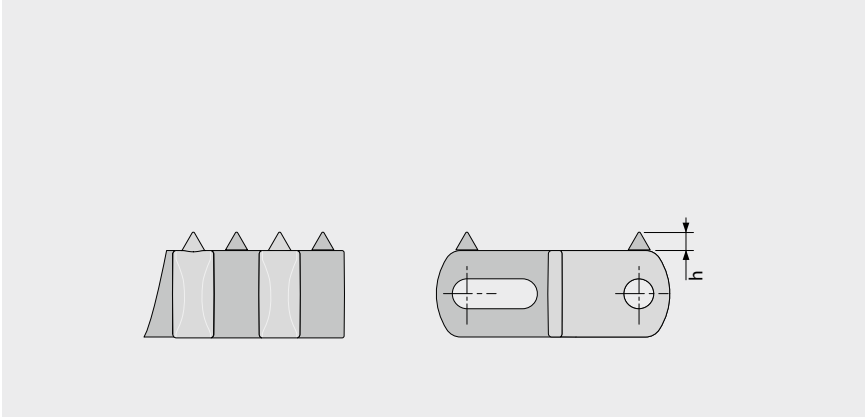

Basic data

Material	Color	Height (h)
		2.8 mm 0.11 inch
POM	BL	●

Molded width: 152 mm (6.0 in)

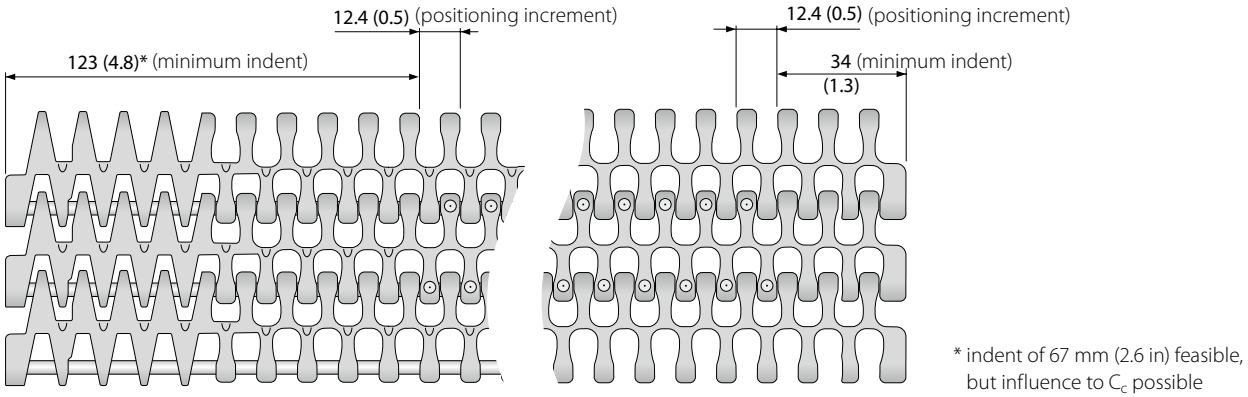

C_c 1.7

C_c 2.2

* indent of 67 mm (2.6 in) feasible, but influence to C_c possible

BL (Blue)

All measurements and tolerances apply at 21 °C; for temperature deviations please see Prolink manual chapter 4.4 "Temperature influence".
All imperial dimensions (inches) are rounded off.
Note: Use of accessory in a belt may impact on the minimum design radii. Please see chapter 6.3 for further information.

Forbo
MOVEMENT SYSTEMS

SERIES 18 | **SIDE GUARDS**

siegling prolink
modular belts

Side flexing and spiral belt | Pitch 25.4 mm (1 in)

S18 SG | Side guards

Lane divider to separate products at curve belt applications

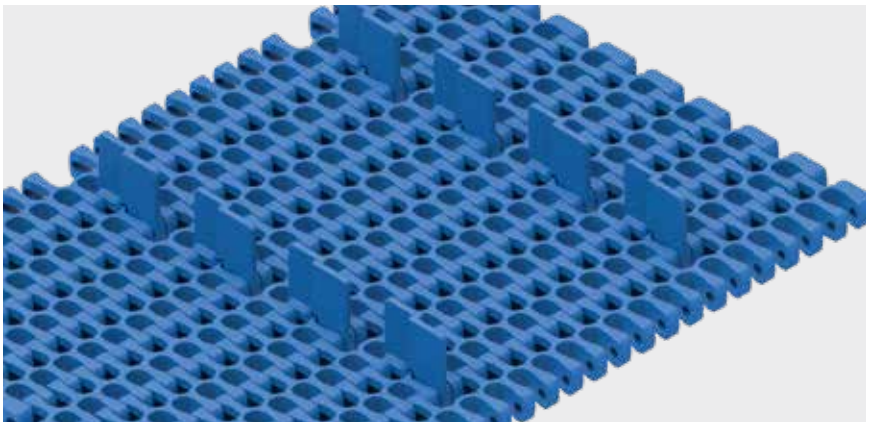

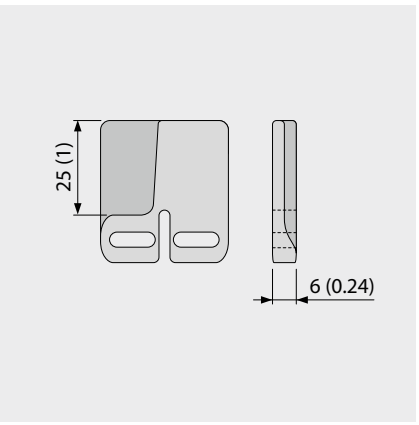

Basic data

Material	Color	Height (h)
		25 mm 1 inch
PE	BL	●

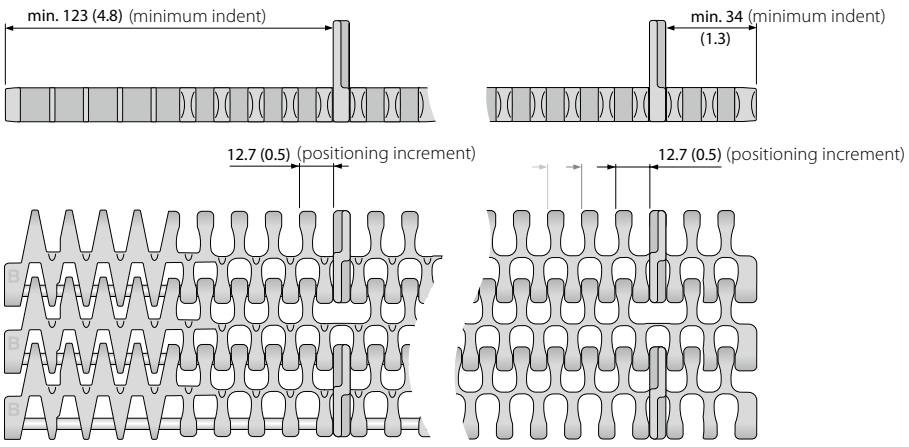

C_c 1.7 C_c 2.2

BL (Blue)

All measurements and tolerances apply at 21 °C; for temperature deviations please see Prolink manual chapter 4.4 "Temperature influence".
All imperial dimensions (inches) are rounded off.
Note: Use of accessory in a belt may impact on the minimum design radii. Please see chapter 6.3 for further information.

Forbo
MOVEMENT SYSTEMS

SERIES 18 | **INSTALLATION NOTES**

Side flexing and spiral belt | Pitch 25.4 mm (1 in)

Preferred travel direction

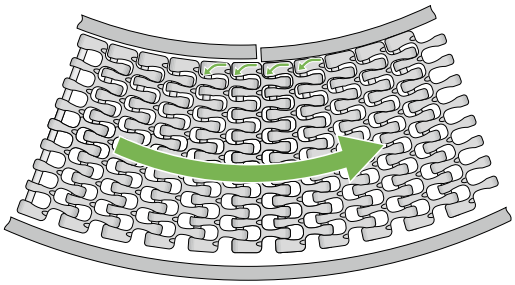

Curve conveyor

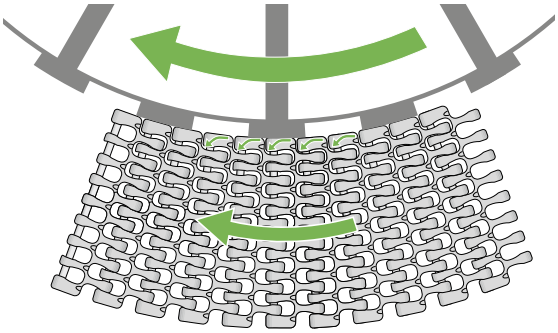

Cage driven spiral

Curve direction/Pin position clockwise -> Belt CW (clockwise)

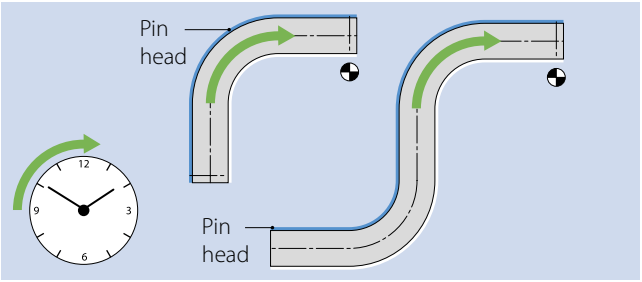

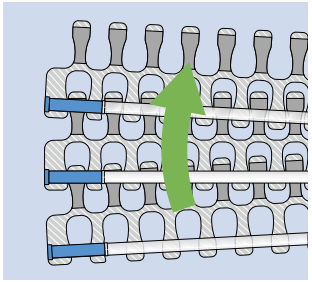

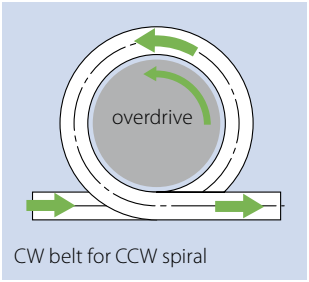

CW belt for CCW spiral

Curve direction/Pin position Counterclockwise -> Belt CCW (Counterclockwise)

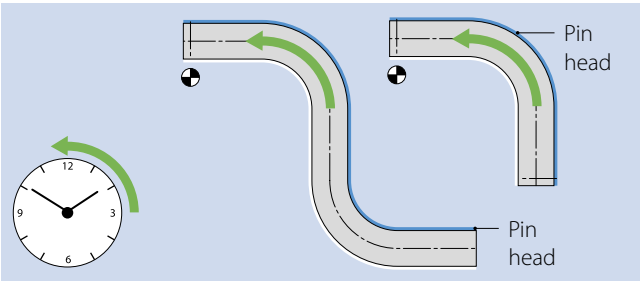

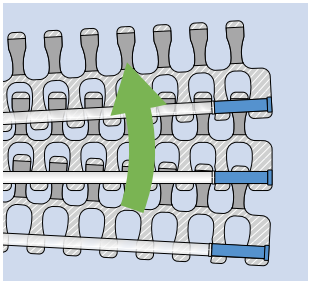

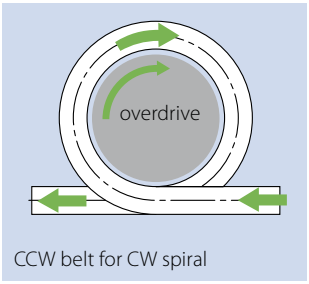

CCW belt for CW spiral

Surface/Sprocket position

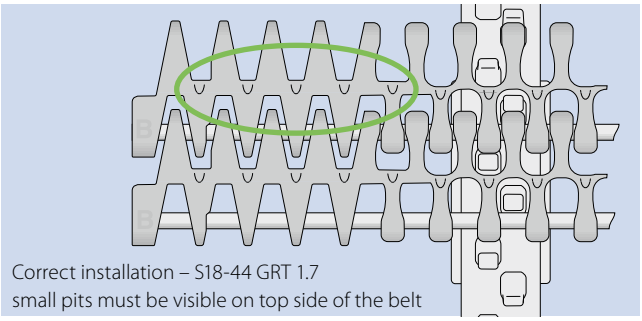

Correct installation – S18-44 GRT 1.7
small pits must be visible on top side of the belt

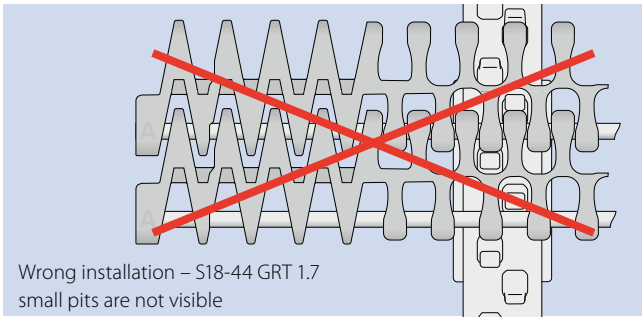

Wrong installation – S18-44 GRT 1.7
small pits are not visible

Further information in chapter 3 and 5

MOVEMENT SYSTEMS

LEGEND

① Series
S1 … S19

② Open area/Sprocket size
Percentage open area Format: xx E.g. 20 = 20 %
For sprockets: number of teeth Format: "Z"xx E.g. Z12 = 12 teeth

③ Surface pattern	
BSL	Base module for slider
CTP	Cone top
CUT	Curved top
FLT	Flat top (smooth)
FRT-OG	Friction top without High Grip insert
FRT(X)	Friction top (Design X)
GRT	Grid top
HDK	High Deck
LRB	Lateral rib
MOD	Modified module shape
NCL	No cling
NPY	Negative pyramid
NSK	Non skid
NSK2	Non skid, nonwoven variant
NTP	Nub top (round studs)
PRR	Pin Retained Rollers
RAT	Radius top
RRB	Raised rib
RSA	Reduced surface area
RTP	Roller top
SRS	Slip-resistant surface

④ Type	
BPU	Bucket profile
CAP	Pin lock & belt edge sealing
CCW	Counter clockwise
CLP	Clip
CM	Center module
CW	Clockwise
FPL	Finger plate
HDT	Hold Down Tab
IDL	Idler
INS	Insert
PIN	Coupling rod
PMC	Profile module center
PMU	Profile module universal
PSP	ProSnap
PSU-0	Prof. scoop uni. closed
PSU-X	Prof. scoop uni. x% open
RI	High Grip insert
REL	Reinforcement Link (SS)
ROL	Rollers
RTR	Retaining ring
SG	Module with sideguard
SGL	Side guard, left
SGR	Side guard, right
SLI	Slider
SMA	Side module, A side
SMB	Side module, B side
SML	Side module, left
SMR	Side module, right
SMT	Side module, tight radius
SMU	Side module, universal/both sides
SPR	Sprocket
SPR-SP	Split sprocket, 2-part
SSL	Self stacker side module, left
SSR	Self stacker side module, right
TPL	Turning panel, left
TPR	Turning panel, right
UM	Universal module
WSC	Wheel Stopper Center
WSS	Wheel Stopper Side

⑤ Style	
1.6	1.6 collapse factor
1.7	1.7 collapse factor
2.2	2.2 collapse factor
2.2 G	2.2 collapse factor, guided
A90	Angle 90° to conveying direction
BT	Bearing tab
DR	Double row sprocket
F1, F2, F3 …	Collapse factor modules
G	Guided
GT	Guiding tabs
HD	Hold Down
HR	Hard removable pin
Ixx	xx = indent in mm
RG	Reversed guided
SG	Side guard
SP	Split sprocket
ST	Strong
V2	Version 2 indicates a design update

⑥ Material	
PA	Polyamide
PA-FR	Polyamide flame retadant
PA-FRHC	Polyamide, flame retadant, high conductive
PA-HT	Polyamide high temperature
PBT	Polybutylenterephthalate
PE	Polyethylene
PE-I	PE impact resistant
PE-MD	PE metal detectable
PK	Wear & impact improved polymer
PLX	Special PK for pins with small diameter – higher stiffness
POM	Polyoxymethylene (Polyacetal)
POM-CR	POM cut resistant
POM-HC	POM highly conductive
POM-MD	POM metal detectable
POM-PE	POM side modules + PE center modules
POM-PP	POM side modules + PP center modules
PP	Polypropylene
PP-MD	PP metal detectable
PP-SW	PP steam and hot water resistant
PXX-HC	Self-extinguishing highly conductive material
R1	TPE 80 Shore A, PP
R2	EPDM 80 Shore A, vulcanized
R3	TPE 70 Shore A, POM
R4	TPE 86 Shore A, PP
R5	TPE 52 Shore A, PP
R6	TPE 63 Shore A, POM
R7	TPE 50 Shore A, PP
R8	TPE 55 Shore A, PE
R11	TPE 50 Shore A, POM
SER	Self-extinguishing TPE
SS	Stainless steel
SSS	Stainless steel acid resistant
TPC1	Themoplastic Copolyester
-HA	Supports the HACCP concept
HW	High Wear resistant material

⑦ Color*	
AT	Anthracite
BG	Beige
BK	Black
BL	Blue
DB	Dark blue
GN	Green
LB	Light blue
LG	Light gray
OR	Orange
RE	Red
TQ	Turquoise
UC	Uncolored
WT	White
YL	Yellow

⑧ Height/Diameter/ Bore size and style
Height in mm (in) Format: Hxxx Pin diameter in mm (in) Format: Dxxx
Bore size: SQ (= square) or RD (= round) either in mm or inches Format: SQxxMM or RDxxIN

⑨ Length/Width
Pins Length in mm (in) Format: Lxxx Module width in mm (in) Format: Wxxx REL in mm one decimal Format: Wx.x

* For each series' standard colors please refer to the table of materials for each belt (chapter 1.2). A number of other colors are available on request. Colors can vary from the original due to the print, production processes or material used.