# EXCERPT FROM PROLINK ENGINEERING MANUAL

05/26 (Ref-No. 888)

**siegling prolink**
modular belts

## SERIES 9

Side flexing and spiral belts
Pitch 50 mm (1.97 in)

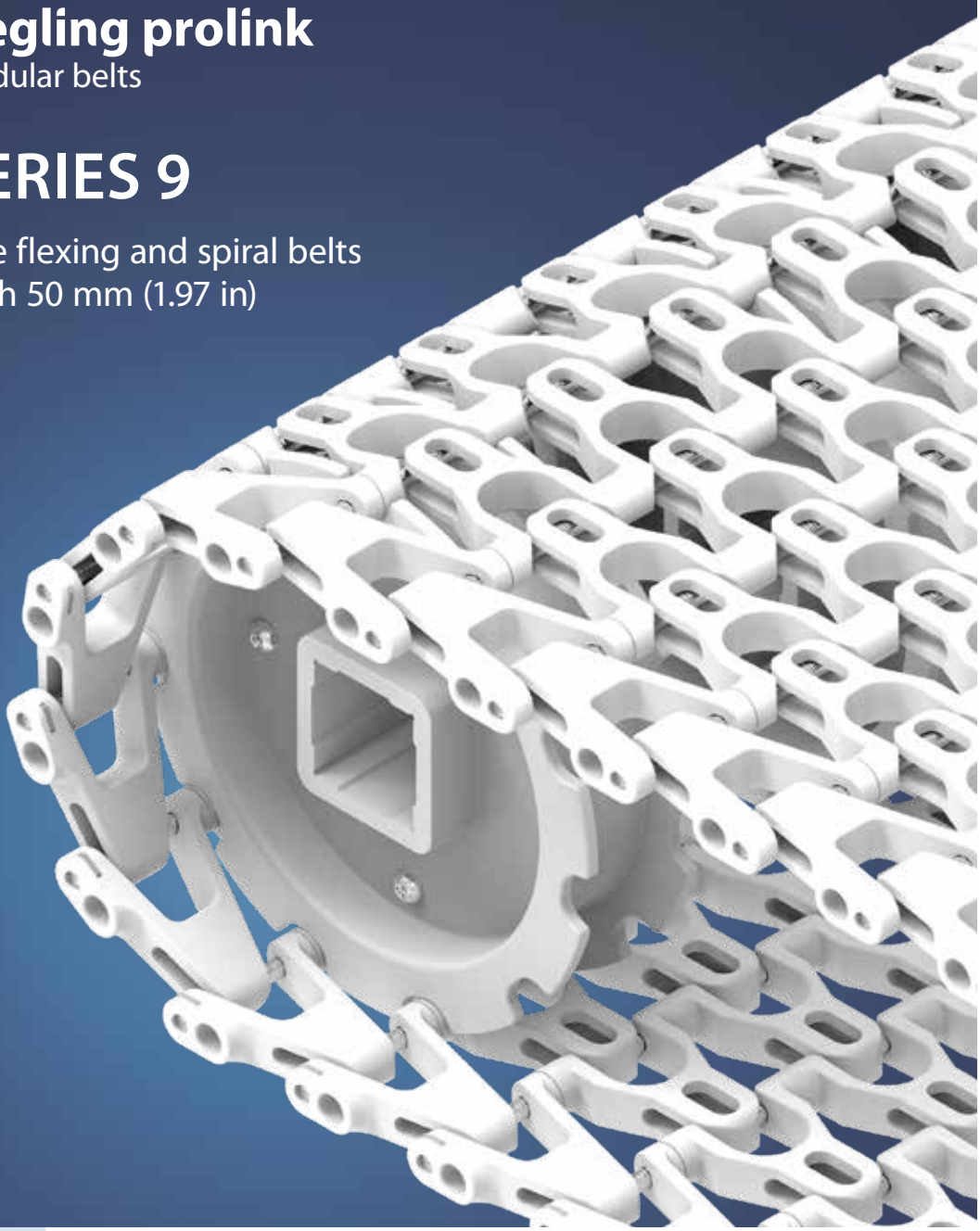

**Forbo Siegling GmbH**
Lilienthalstraße 6/8, D-30179 Hannover
Telefon +49 511 6704 0
www.forbo-siegling.com, siegling@forbo.com

Ref. no. 888-1_1.2_S9

# SERIES 9 | **OVERVIEW**

siegling prolink
modular belts

Side flexing and spiral belts | Pitch 50 mm (1.97 in)

## Belts for medium to heavy-duty food and non-food applications

**Side view scale 1:1**

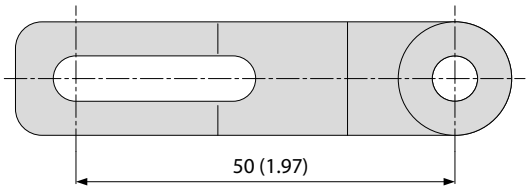


**Design characteristics**

- Suitable for both straight and radius conveying
- 57 % open area for excellent air circulation and drainage
- Stainless steel hinge pins for high load capacity, lateral stiffness, less belt supports and minimum belt lifting in curves
- No potential belt edge catch points due to safe fixing of hinge pin

**Basic data**

| | |
|---|---|
| Pitch | 50 mm (1.97 in) |
| Belt width min. | 100 mm (3.9 in) |
| Width increments | 50 mm (1.97 in) |
| Hinge pins | 6 mm (0.24 in) made of stainless steel |

**Available surface pattern and opening area**

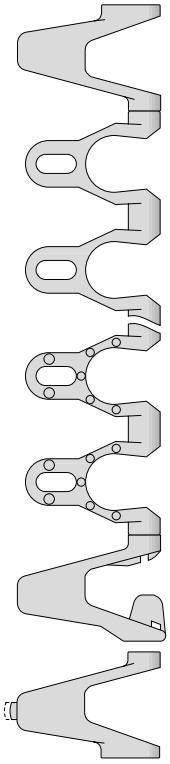

S9-57 GRT
Open (57 %), lattice-shaped surface

S9-57 NTP
Open (57 %), lattice-shaped surface with nub top

Guided belts

Longer side modules

Attention:
Due to the very large surface openings, personnel must be instructed not to place their fingers in or on this belt.

**Sprockets**
in different sizes with round or square bore

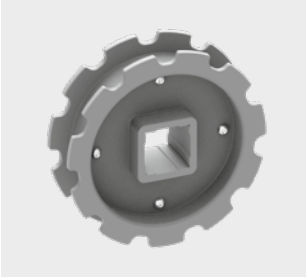

**Profiles**
in different heights and designs for inclines

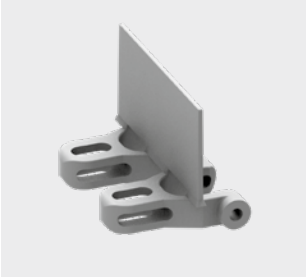

**Side guards**
in different heights for retention of bulk products



**Self stacker**
in different heights for spiral applications



# SERIES 9 | **BELT TYPES**

siegling prolink
modular belts

Side flexing and spiral belt | Pitch 50 mm (1.97 in) | $C_C = 1.8$

## **S9-57 GRT** | 57 % Opening | Grid top

Open area (57 %) for excellent air circulation and drainage | 31 % contact area (Largest opening: Ø = 24.3 mm/0.96 in) | Lattice-shaped surface | Collapse factor ($C_C$) = 1.8

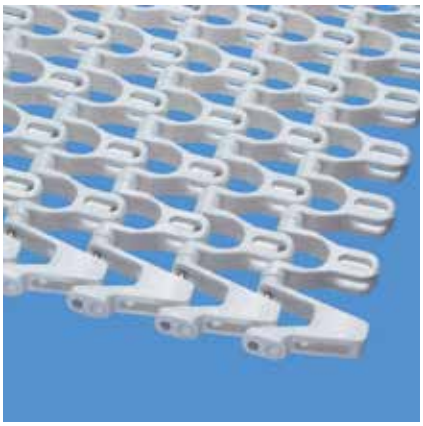

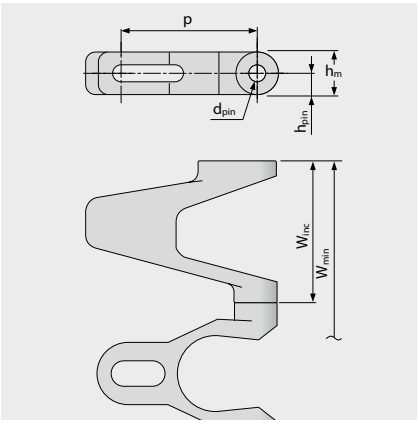


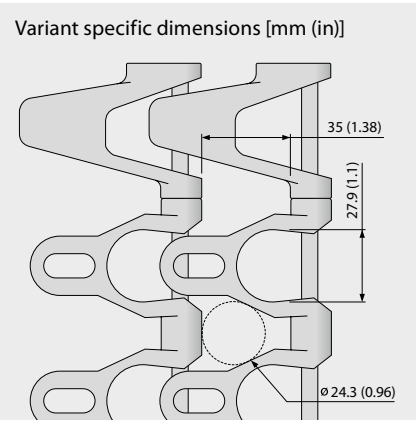


### Belt dimensions

| | p | $d_{pin}$ | $h_m$ | $h_{pin}$ | $h_s$ | $W_{min}$ | $W_{inc}$ | $W_{tol}$ | Minimum flex radii[1] | | | | |
|---|---|---|---|---|---|---|---|---|---|---|---|---|---|
| | Pitch | Pin Ø | Thickness | Pin position | Height | Width min. | Width Increment | Width tolerance [%] | r1 $C_c \times W_B$ | r2 | r3 | r4 | r5 |
| mm | 50.0 | 6.0 | 15.0 | 7.5 | 0.0 | 150.0 | 50.0 | ±0.3 | 1.8 x $W_B$ | 50.0 | 100.0 | 150.0 | 50.0 |
| inch | 1.97 | 0.24 | 0.59 | 0.3 | 0.0 | 5.91 | 1.97 | ±0.3 | 1.8 x $W_B$ | 1.97 | 3.94 | 5.91 | 1.97 |

$W_B$ = Belt width, further information regarding r1 see page III-31

### Available standard materials [3]

| Belt | | Pin | Nominal belt pull, straight | | Nominal belt pull, curve | | Weight | | Width deviation | Temperature | | Certificates[2] | | |
|---|---|---|---|---|---|---|---|---|---|---|---|---|---|---|
| Material | Color | Material | [N/mm] | [lb/ft] | [N] | [lb] | [kg/m²] | [lb/ft²] | [%] | [°C] | [°F] | FDA | EU | MHLW |
| PA* | BL | SS | 24 | 1645 | 2240 | 504 | 11.3 | 2.31 | 0.0 | -40/120 | -40/248 | ● | ● | ● |
| PE | WT | SS | 12 | 822 | NR | NR | 9.5 | 1.95 | 0.0 | -70/65 | -94/149 | ● | ● | ● |
| POM-CR | UC | SS | 30 | 2056 | 2800 | 629 | 11.5 | 2.36 | 0.0 | -45/90 | -49/194 | ● | ● | ● |
| POM-CR | LG | SS | 30 | 2056 | 2800 | 629 | 11.5 | 2.36 | 0.0 | -45/90 | -49/194 | ● | ● | ● |
| POM-CR | DB | SS | 30 | 2056 | 2800 | 629 | 11.5 | 2.36 | 0.0 | -45/90 | -49/194 | ● | ● | ● |
| PP | WT | SS | 22 | 1507 | 1600 | 360 | 9.3 | 1.9 | 0.0 | 5/100 | 41/212 | ● | ● | ● |
| PP | LG | SS | 22 | 1507 | 1600 | 360 | 9.3 | 1.9 | 0.0 | 5/100 | 41/212 | ● | ● | ● |

NR = not recommended

* Values valid for dry applications (RH <50 %). Belts in PA material will absorb water in wet environments, causing them to expand and reduce the nominal belt pull capacity.

**Attention!** Due to the very large surface openings, personnel must be instructed not to place their fingers in or on this belt.

DB (Dark blue), LG (Light gray), WT (White), UC (Uncolored)

All measurements and tolerances apply at 21 °C; for temperature deviations please see Prolink manual chapter 4.4 "Temperature influence".
All imperial dimensions (inches) are rounded off.

[1] Flex radii: r1 = side flex, r2 = front flex on roller, r3 = back flex on load bearing roller, r4 = back flex on Hold Down shoe, r5 = back flex on roller

[2] Complies with FDA 21 CFR | Complies with (EU) 10/2011 and (EC) 1935/2004 regulations regarding the raw materials used and the migration thresholds | Complies with Japanese MHLW Notification 370
● = available | – = not available | empty cells = not tested

[3] More materials and colors on request

Forbo
MOVEMENT SYSTEMS

Side flexing and spiral belt | Pitch 50 mm (1.97 in) | $C_C = 1.8$

## **S9-57 NTP** | 57 % Opening | Nub top (round studs)

Open area (57 %) for excellent air circulation and drainage | Lattice-shaped surface with 3.0 mm (0.12 in) high round studs 4 % contact area (Largest opening: Ø = 24.3 mm/0.96 in) | Nub top surface for increased grip and reduced contact area for good release | Collapse factor ($C_C$) = 1.8

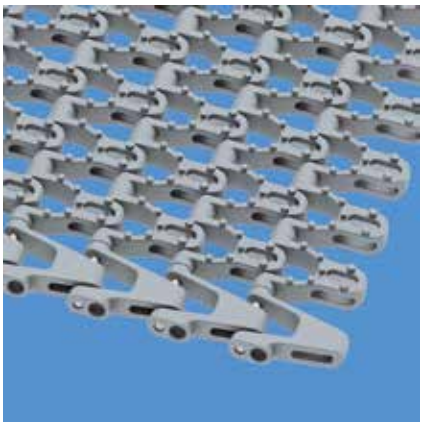

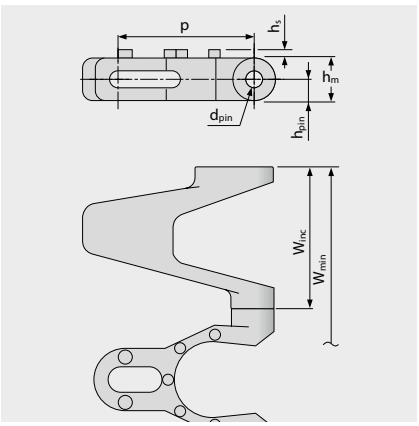


Variant specific dimensions [mm (in)]

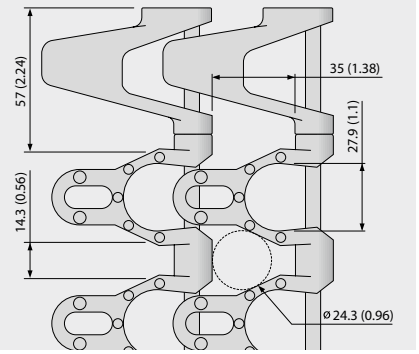


### Belt dimensions

| | p | $d_{pin}$ | $h_m$ | $h_{pin}$ | $h_s$ | $W_{min}$ | $W_{inc}$ | $W_{tol}$ | Minimum flex radii[1] | | | | |
|---|---|---|---|---|---|---|---|---|---|---|---|---|---|
| | Pitch | Pin Ø | Thickness | Pin position | Height | Width min. | Width Increment | Width tolerance [%] | r1 $C_c \times W_B$ | r2 | r3 | r4 | r5 |
| mm | 50.0 | 6.0 | 15.0 | 7.5 | 3.0 | 150.0 | 50.0 | ±0.3 | 1.8 x $W_B$ | 50.0 | 100.0 | 150.0 | 50.0 |
| inch | 1.97 | 0.24 | 0.59 | 0.3 | 0.12 | 5.91 | 1.97 | ±0.3 | 1.8 x $W_B$ | 1.97 | 3.94 | 5.91 | 1.97 |

$W_B$ = Belt width, further information regarding r1 see page III-31

### Mold to order belts [3]

| Belt | | Pin | Nominal belt pull, straight | | Nominal belt pull, curve | | Weight | | Width deviation | Temperature | | Certificates[2] | | |
|---|---|---|---|---|---|---|---|---|---|---|---|---|---|---|
| Material | Color | Material | [N/mm] | [lb/ft] | [N] | [lb] | [kg/m²] | [lb/ft²] | [%] | [°C] | [°F] | FDA | EU | MHLW |
| PE | | SS | 12 | 822 | NR | NR | 9.7 | 1.99 | 0.0 | -70/65 | -94/149 | | | |
| POM-CR | | SS | 30 | 2056 | 2800 | 629 | 11.7 | 2.4 | 0.0 | -45/90 | -49/194 | | | |
| PP | LG | SS | 22 | 1507 | 1600 | 360 | 9.4 | 1.93 | 0.0 | 5/100 | 41/212 | ● | ● | ● |

NR = not recommended

**Attention!** Due to the very large surface openings, personnel must be instructed not to place their fingers in or on this belt.

LG (Light gray)

All measurements and tolerances apply at 21 °C; for temperature deviations please see Prolink manual chapter 4.4 "Temperature influence".
All imperial dimensions (inches) are rounded off.

[1] Flex radii: r1 = side flex, r2 = front flex on roller, r3 = back flex on load bearing roller, r4 = back flex on Hold Down shoe, r5 = back flex on roller

[2] Complies with FDA 21 CFR | Complies with (EU) 10/2011 and (EC) 1935/2004 regulations regarding the raw materials used and the migration thresholds | Complies with Japanese MHLW Notification 370
● = available | – = not available | empty cells = not tested

[3] More materials and colors on request

Side flexing and spiral belt | Pitch 50 mm (1.97 in) | $C_C = 1.8$

## **S9-57 GRT G** | 57 % Opening | Grid top · guided

Open area (57 %) for excellent air circulation and drainage | 31 % contact area (Largest opening: Ø = 24.3 mm/0.96 in) | Lattice-shaped surface | Guided version (G) allows utilization of the entire belt width | Collapse factor ($C_C$) = 1.8

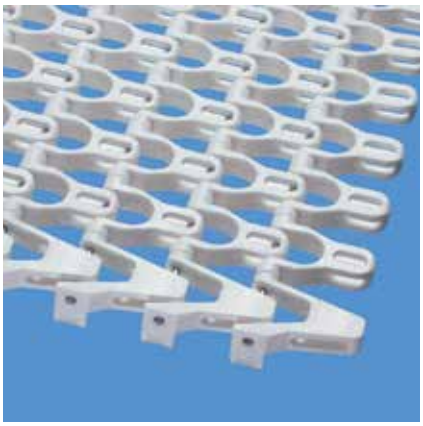

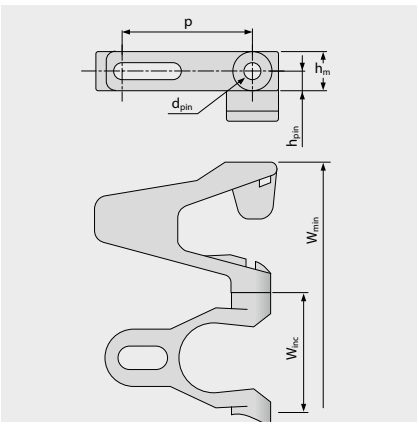


Variant specific dimensions [mm (in)]

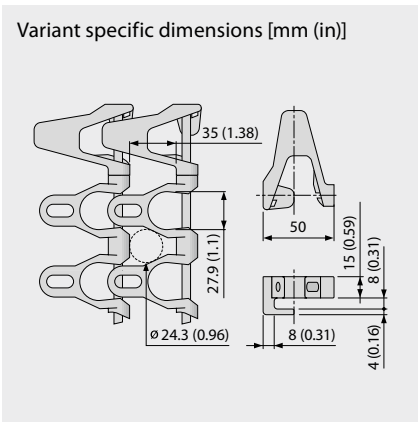


### Belt dimensions

| | p | $d_{pin}$ | $h_m$ | $h_{pin}$ | $h_s$ | $W_{min}$ | $W_{inc}$ | $W_{tol}$ | Minimum flex radii[1] | | | | |
|---|---|---|---|---|---|---|---|---|---|---|---|---|---|
| | Pitch | Pin Ø | Thickness | Pin position | Height | Width min. | Width Increment | Width tolerance [%] | r1 $C_c \times W_B$ | r2 | r3 | r4 | r5 |
| mm | 50.0 | 6.0 | 15.0 | 7.5 | 0.0 | 150.0 | 50.0 | ±0.3 | 1.8 x $W_B$ | 50.0 | 100.0 | 150.0 | 50.0 |
| inch | 1.97 | 0.24 | 0.59 | 0.3 | 0.0 | 5.91 | 1.97 | ±0.3 | 1.8 x $W_B$ | 1.97 | 3.94 | 5.91 | 1.97 |

$W_B$ = Belt width, further information regarding r1 see page III-31

### Available standard materials [3]

| Belt | | Pin | Nominal belt pull, straight | | Nominal belt pull, curve | | Weight | | Width deviation | Temperature | | Certificates[2] | | |
|---|---|---|---|---|---|---|---|---|---|---|---|---|---|---|
| Material | Color | Material | [N/mm] | [lb/ft] | [N] | [lb] | [kg/m²] | [lb/ft²] | [%] | [°C] | [°F] | FDA | EU | MHLW |
| POM-CR | UC | SS | 30 | 2056 | 2800 | 629 | 11.5 | 2.36 | 0.0 | -45/90 | -49/194 | ● | ● | ● |
| PP | WT | SS | 22 | 1507 | 1600 | 360 | 9.3 | 1.9 | 0.0 | 5/100 | 41/212 | ● | ● | ● |
| Mold to order belts | | | | | | | | | | | | | | |
| PE | | SS | 12 | 822 | NR | NR | 9.5 | 1.95 | 0.0 | -70/65 | -94/149 | | | |

NR = not recommended

**Attention!** Due to the very large surface openings, personnel must be instructed not to place their fingers in or on this belt.

☐ WT (White), ☐ UC (Uncolored)

All measurements and tolerances apply at 21 °C; for temperature deviations please see Prolink manual chapter 4.4 "Temperature influence".
All imperial dimensions (inches) are rounded off.

[1] Flex radii: r1 = side flex, r2 = front flex on roller, r3 = back flex on load bearing roller, r4 = back flex on Hold Down shoe, r5 = back flex on roller

[2] Complies with FDA 21 CFR | Complies with (EU) 10/2011 and (EC) 1935/2004 regulations regarding the raw materials used and the migration thresholds | Complies with Japanese MHLW Notification 370
● = available | – = not available | empty cells = not tested

[3] More materials and colors on request

# SERIES 9 | **BELT TYPES**

siegling prolink
modular belts

Side flexing and spiral belt | Pitch 50 mm (1.97 in) | $C_C = 1.8$

## **S9-57 NTP G** | 57 % Opening | Nub top (round studs) · guided

Open area (57 %) for excellent air circulation and drainage | With round studs for increased grip (4 % contact area, largest opening: Ø = 24.3 mm/0.96 in) | Guided version (G) allows utilization of the entire belt width | Collapse factor ($C_C$) = 1.8

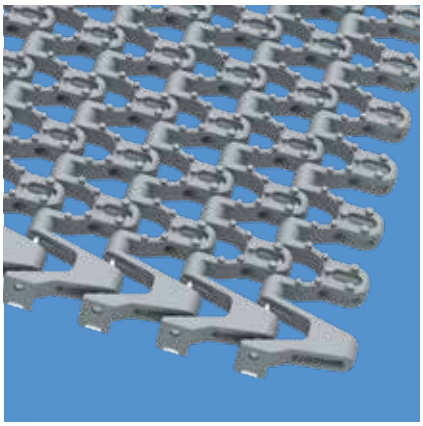

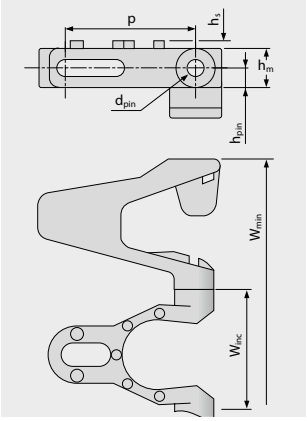


Variant specific dimensions [mm (in)]

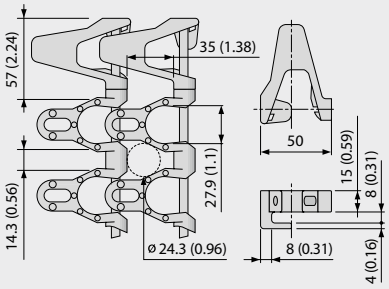


### Belt dimensions

| | p | $d_{pin}$ | $h_m$ | $h_{pin}$ | $h_s$ | $W_{min}$ | $W_{inc}$ | $W_{tol}$ | Minimum flex radii[1] | | | | |
|---|---|---|---|---|---|---|---|---|---|---|---|---|---|
| | Pitch | Pin Ø | Thickness | Pin position | Height | Width min. | Width Increment | Width tolerance [%] | r1 $C_c \times W_B$ | r2 | r3 | r4 | r5 |
| mm | 50.0 | 6.0 | 15.0 | 7.5 | 3.0 | 150.0 | 50.0 | ±0.3 | 1.8 x $W_B$ | 50.0 | 100.0 | 150.0 | 50.0 |
| inch | 1.97 | 0.24 | 0.59 | 0.3 | 0.12 | 5.91 | 1.97 | ±0.3 | 1.8 x $W_B$ | 1.97 | 3.94 | 5.91 | 1.97 |

$W_B$ = Belt width, further information regarding r1 see page III-31

### Mold to order belts [3]

| Belt | | Pin | Nominal belt pull, straight | | Nominal belt pull, curve | | Weight | | Width deviation | Temperature | | Certificates[2] | | |
|---|---|---|---|---|---|---|---|---|---|---|---|---|---|---|
| Material | Color | Material | [N/mm] | [lb/ft] | [N] | [lb] | [kg/m²] | [lb/ft²] | [%] | [°C] | [°F] | FDA | EU | MHLW |
| PE | | SS | 12 | 822 | NR | NR | 9.7 | 1.99 | 0.0 | -70/65 | -94/149 | | | |
| POM-CR | | SS | 30 | 2056 | 2800 | 629 | 11.7 | 2.40 | 0.0 | -45/90 | -49/194 | | | |
| PP | LG | SS | 22 | 1507 | 1600 | 360 | 9.4 | 1.93 | 0.0 | 5/100 | 41/212 | ● | ● | ● |

NR = not recommended

**Attention!** Due to the very large surface openings, personnel must be instructed not to place their fingers in or on this belt.

LG (Light gray)

All measurements and tolerances apply at 21 °C; for temperature deviations please see Prolink manual chapter 4.4 "Temperature influence".
All imperial dimensions (inches) are rounded off.

[1] Flex radii: r1 = side flex, r2 = front flex on roller, r3 = back flex on load bearing roller, r4 = back flex on Hold Down shoe, r5 = back flex on roller

[2] Complies with FDA 21 CFR | Complies with (EU) 10/2011 and (EC) 1935/2004 regulations regarding the raw materials used and the migration thresholds | Complies with Japanese MHLW Notification 370
● = available | – = not available | empty cells = not tested

[3] More materials and colors on request

Forbo
MOVEMENT SYSTEMS

# SERIES 9 | **BELT TYPES**

siegling prolink
modular belts

Side flexing and spiral belt | Pitch 50 mm (1.97 in)

## S9-57 GRT F2, F3, F4, F5, F6, F7, F8 | 57 % Opening

Open area (57 %) for excellent air circulation and drainage (Largest opening: Ø = 24.3 mm/0.96 in) | Special edge modules with noses (F2 –F8) of varying size ensure smooth belt operation when the system turn radius is greater than the minimum belt turn radius | Collapse factor ($C_c$) = 2.12 – 5.50

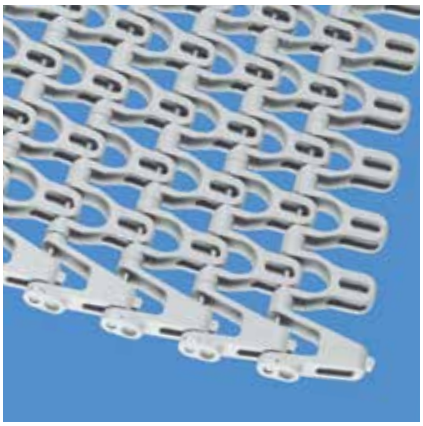

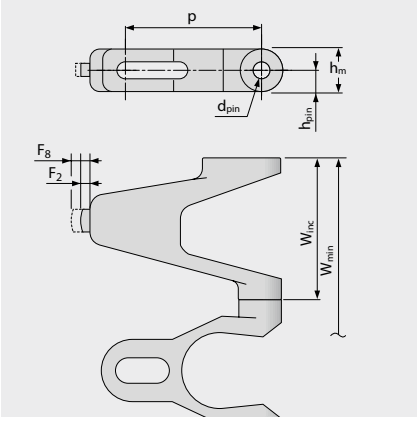


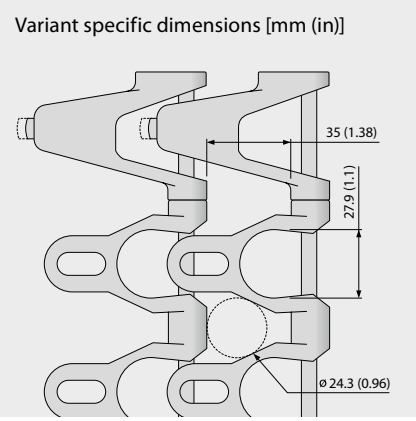


### Belt dimensions

| | p | $d_{pin}$ | $h_m$ | $h_{pin}$ | $h_s$ | $W_{min}$ | $W_{inc}$ | $W_{tol}$ | Minimum flex radii[1] | | | |
|---|---|---|---|---|---|---|---|---|---|---|---|---|
| | Pitch | Pin Ø | Thickness | Pin position | Height | Width min. | Width Increment | Width tolerance [%] | r1 $C_c$ x $W_B$ | r2 | r3 | r4 | r5 |
| mm | 50.0 | 6.0 | 15.0 | 7.5 | 0.0 | 150.0 | 50.0 | ±0.3 | $C_C$ x $W_B$ | 50.0 | 100.0 | 150.0 | 50.0 |
| inch | 1.97 | 0.24 | 0.59 | 0.3 | 0.0 | 5.91 | 1.97 | ±0.3 | $C_C$ x $W_B$ | 1.97 | 3.94 | 5.91 | 1.97 |

$W_B$ = Belt width. $C_C$ see table below

### Mold to order belts [3]

| Belt | | Pin | Nominal belt pull, straight | | Nominal belt pull, curve | | Weight | | Width deviation | Temperature | | Certificates[2] | | |
|---|---|---|---|---|---|---|---|---|---|---|---|---|---|---|
| Material | Color | Material | [N/mm] | [lb/ft] | [N] | [lb] | [kg/m²] | [lb/ft²] | [%] | [°C] | [°F] | FDA | EU | MHLW |
| PE | | SS | 12 | 822 | NR | NR | 9.5 | 1.95 | 0.0 | -70/65 | -94/149 | | | |
| POM-CR | UC | SS | 30 | 2056 | 2800 | 629 | 11.5 | 2.36 | 0.0 | -45/90 | -49/194 | ● | ● | ● |
| PP | | SS | 22 | 1507 | 1600 | 360 | 9.3 | 1.9 | 0.0 | 5/100 | 41/212 | | | |

### Module variants

| Module | F2 | F3 | F4 | F5 | F6 | F7 | F8 |
|---|---|---|---|---|---|---|---|
| $C_C$ | 2.12 | 2.40 | 2.65 | 3.0 | 3.68 | 4.58 | 5.50 |

For further information see chapter 3.3 (paragraph spiral conveyors)

**Attention!** Due to the very large surface openings, personnel must be instructed not to place their fingers in or on this belt.

UC (Uncolored)

All measurements and tolerances apply at 21 °C; for temperature deviations please see Prolink manual chapter 4.4 "Temperature influence".
All imperial dimensions (inches) are rounded off.

[1] Flex radii: r1 = side flex, r2 = front flex on roller, r3 = back flex on load bearing roller, r4 = back flex on Hold Down shoe, r5 = back flex on roller

[2] Complies with FDA 21 CFR | Complies with (EU) 10/2011 and (EC) 1935/2004 regulations regarding the raw materials used and the migration thresholds | Complies with Japanese MHLW Notification 370
● = available | – = not available | empty cells = not tested

[3] More materials and colors on request

Forbo
MOVEMENT SYSTEMS

## **S9 SPR** | Sprockets

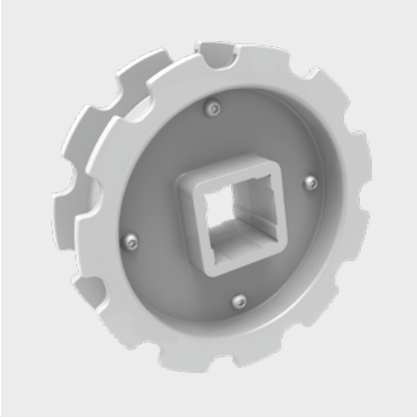

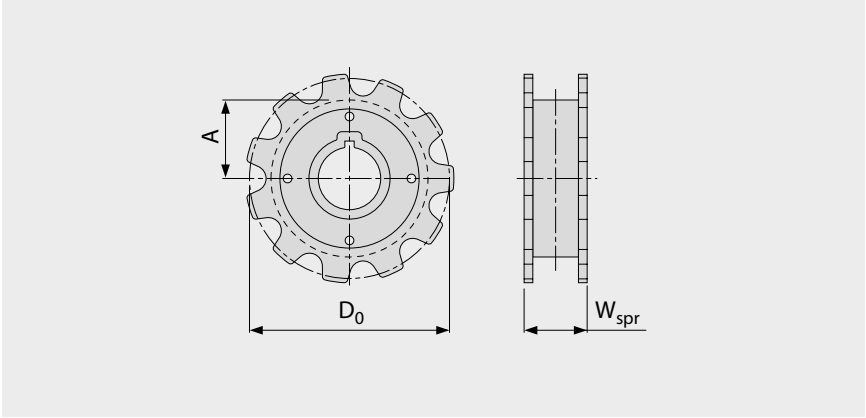


### Main dimensions

| Sprocket size (Number of teeth) | | Z11 |
|---|---|---|
| $W_{spr}$ | mm | 49.0 |
| | inch | 1.93 |
| $D_0$ | mm | 178.8 |
| | inch | 7.04 |
| $A_{max}$ | mm | 81.9 |
| | inch | 3.22 |
| $A_{min}$ | mm | 77.4 |
| | inch | 3.05 |

**Shaft bores** (● = Round, ■ = Square; ❍ or ❑ = mold to order)

| | | |
|---|---|---|
| 40 | mm | ● / ■ |
| 1.5 | inch | ❑ |

Material: POM, Color: UC

UC (Uncolored)

All measurements and tolerances apply at 21 °C.
All imperial dimensions (inches) are rounded off.
For detailed sprocket and shaft dimensions see appendix 6.3
Number of sprockets (sprocket spacing distance) see chapter 3.2

## S9-57 GRT PMC

Open version (57 %) base module for drainage

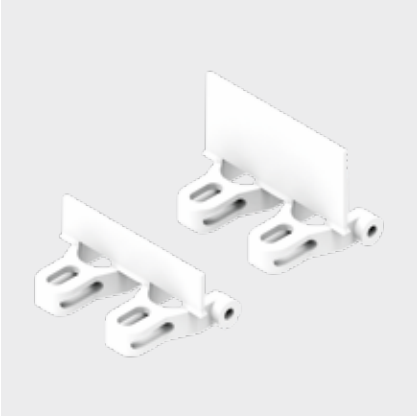

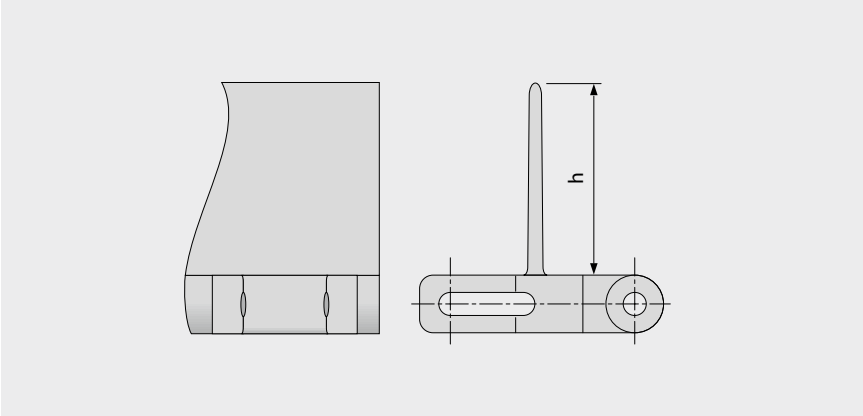


### Basic data

| Material | Color | Height (h) | |
|---|---|---|---|
| | | 25 mm<br>1 inch | 50 mm<br>2 inch |
| POM | UC | mold to order | ● |
| PP | WT | ● | mold to order |

Molded width: 100 mm (3.9 in)

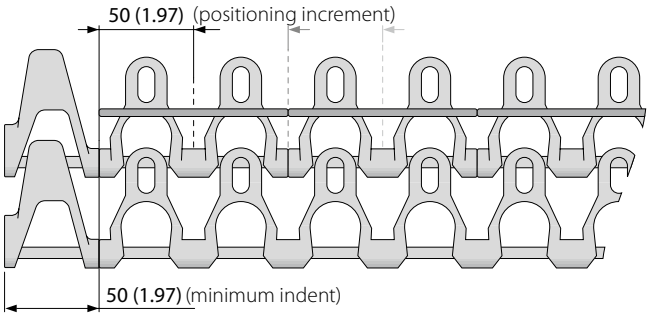


**Attention!** Due to the very large surface openings, personnel must be instructed not to place their fingers in or on this belt.

☐ UC (Uncolored), ☐ WT (White)

All measurements and tolerances apply at 21 °C; for temperature deviations please see Prolink manual chapter 4.4 "Temperature influence".
All imperial dimensions (inches) are rounded off.
Note: Use of accessory in a belt may impact on the minimum design radii. Please see chapter 6.3 for further information.

## **S9 SG** | Side guards

For retention of bulk products | Collapse factor ($C_c$) = 1.8

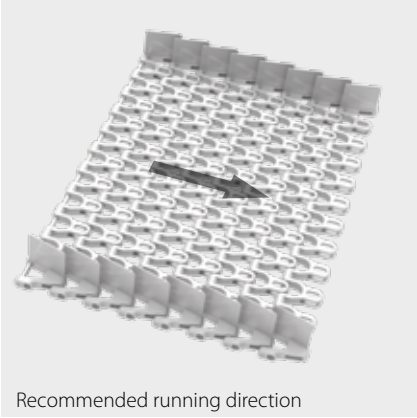

Recommended running direction



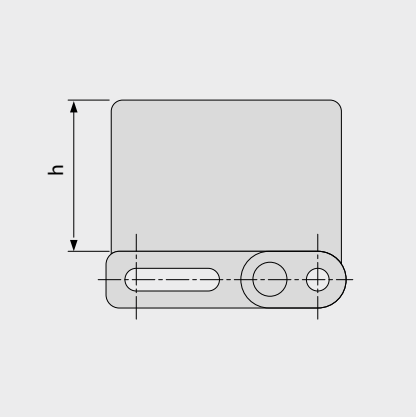


### Basic data

| Material | Color | Height (h) | |
|---|---|---|---|
| | | 25 mm<br>1 inch | 50 mm<br>2 inch |
| POM-CR | UC | ● | ● |

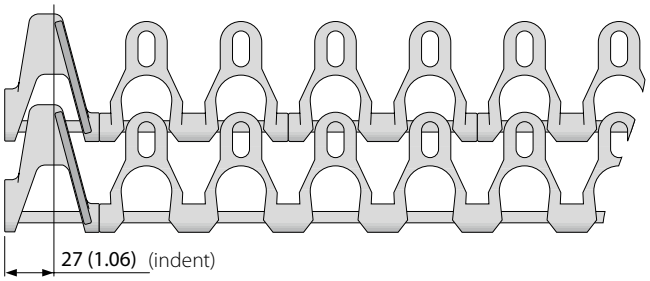


**Attention!** Due to the very large surface openings, personnel must be instructed not to place their fingers in or on this belt.

UC (Uncolored)

All measurements and tolerances apply at 21 °C; for temperature deviations please see Prolink manual chapter 4.4 "Temperature influence".
All imperial dimensions (inches) are rounded off.
Note: Use of accessory in a belt may impact on the minimum design radii. Please see chapter 6.3 for further information.

# SERIES 9 | **SELF STACKER**

siegling prolink
modular belts

Side flexing and spiral belt | Pitch 50 mm (1.97 in)

## **S9 SSL/R** | Self Stacker

For spiral applications with limited space in height (SSL/R at curve inside/cage)

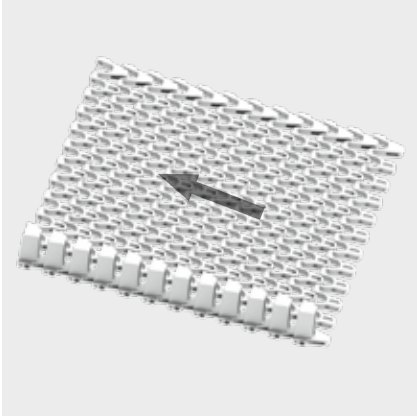

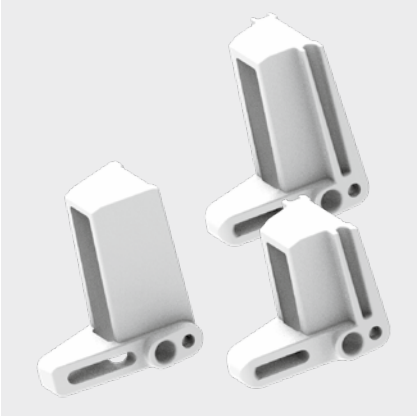

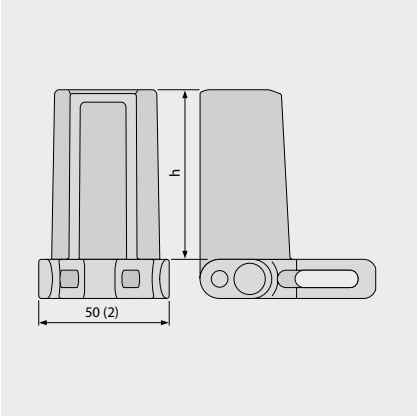


### Basic data

| Material | Color | Height (h) | |
|---|---|---|---|
| | | 45 mm<br>1.8 inch | 65 mm<br>2.6 inch |
| POM-CR | UC | ● | ● |

| Side flexing (F x $W_B$) | | |
|---|---|---|
| Belt width [mm] | Factor 1.8 | Factor 1.6* |
| < 300 | 1.6 | 1.4 |
| 300 – 800 | 1.7 | 1.5 |
| > 800 | 1.8 | 1.6 |

* 1.6 only in H65 mm available

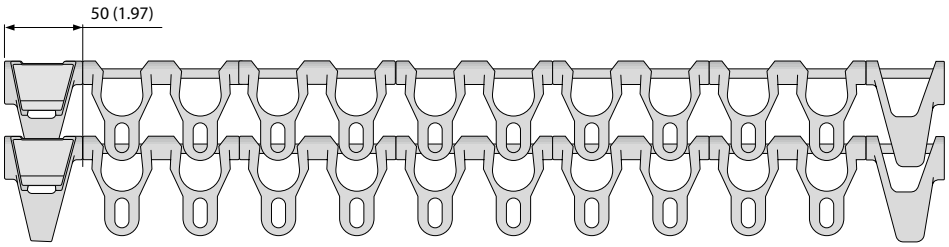


UC (Uncolored)

All measurements and tolerances apply at 21 °C; for temperature deviations please see Prolink manual chapter 4.4 "Temperature influence".
All imperial dimensions (inches) are rounded off.
Note: Use of accessory in a belt may impact on the minimum design radii. Please see chapter 6.3 for further information.

Forbo
MOVEMENT SYSTEMS

# SERIES 9 | **INSTALLATION NOTES**

Side flexing and spiral belt | Pitch 50 mm (1.97 in)

**Preferred travel direction**

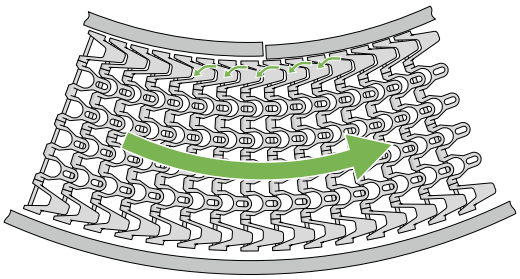

Curve conveyor

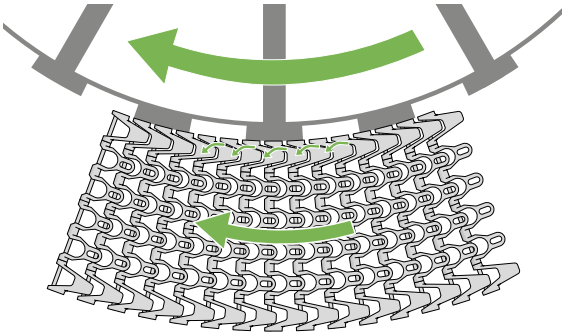

Cage driven spiral

**Curve direction S9 -> CW (ClockWise) and CCW (Counter ClockWise)**

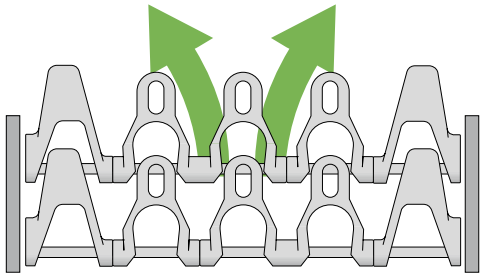

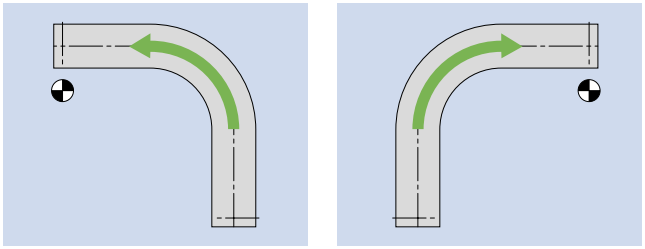

**Curve direction S9 – Spiral application-> CW (ClockWise) and CCW (Counter ClockWise)**

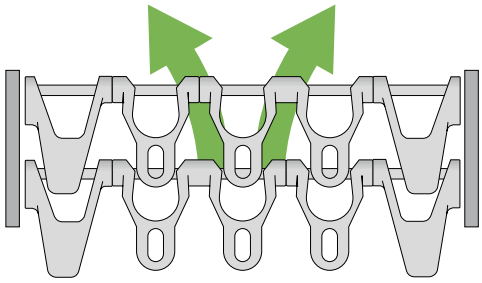

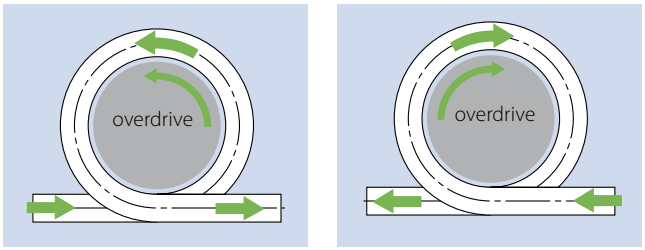


**Sprocket position**

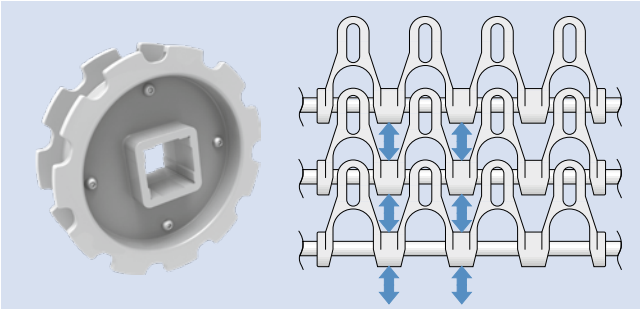

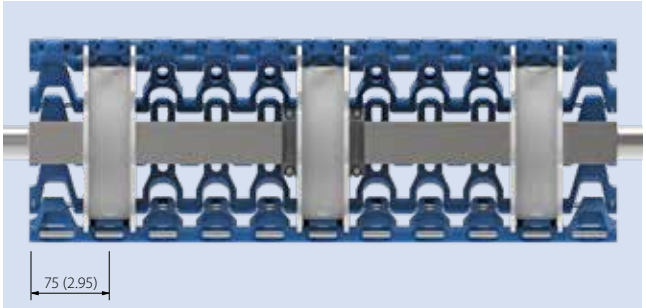




Further information in chapter 3 and 5

MOVEMENT SYSTEMS

# LEGEND

| ① Series |
|---|
| S1 … S19 |

| ② Open area/Sprocket size |
|---|
| Percentage open area<br>Format: xx<br>E.g. 20 = 20 % |
| For sprockets: number of teeth<br>Format: "Z"xx<br>E.g. Z12 = 12 teeth |

| ③ Surface pattern | |
|---|---|
| **BSL** | Base module for slider |
| **CTP** | Cone top |
| **CUT** | Curved top |
| **FLT** | Flat top (smooth) |
| **FRT-OG** | Friction top without High Grip insert |
| **FRT(X)** | Friction top (Design X) |
| **GRT** | Grid top |
| **HDK** | High Deck |
| **LRB** | Lateral rib |
| **MOD** | Modified module shape |
| **NCL** | No cling |
| **NPY** | Negative pyramid |
| **NSK** | Non skid |
| **NSK2** | Non skid, nonwoven variant |
| **NTP** | Nub top (round studs) |
| **PRR** | Pin Retained Rollers |
| **RAT** | Radius top |
| **RRB** | Raised rib |
| **RSA** | Reduced surface area |
| **RTP** | Roller top |
| **SRS** | Slip-resistant surface |

| ④ Type | |
|---|---|
| **BPU** | Bucket profile |
| **CAP** | Pin lock & belt edge sealing |
| **CCW** | Counter clockwise |
| **CLP** | Clip |
| **CM** | Center module |
| **CW** | Clockwise |
| **FPL** | Finger plate |
| **HDT** | Hold Down Tab |
| **IDL** | Idler |
| **INS** | Insert |
| **PIN** | Coupling rod |
| **PMC** | Profile module center |
| **PMU** | Profile module universal |
| **PSP** | ProSnap |
| **PSU-0** | Prof. scoop uni. closed |
| **PSU-X** | Prof. scoop uni. x% open |
| **RI** | High Grip insert |
| **REL** | Reinforcement Link (SS) |
| **ROL** | Rollers |
| **RTR** | Retaining ring |
| **SG** | Module with sideguard |
| **SGL** | Side guard, left |
| **SGR** | Side guard, right |
| **SLI** | Slider |
| **SMA** | Side module, A side |
| **SMB** | Side module, B side |
| **SML** | Side module, left |
| **SMR** | Side module, right |
| **SMT** | Side module, tight radius |
| **SMU** | Side module, universal/both sides |
| **SPR** | Sprocket |
| **SPR-SP** | Split sprocket, 2-part |
| **SSL** | Self stacker side module, left |
| **SSR** | Self stacker side module, right |
| **TPL** | Turning panel, left |
| **TPR** | Turning panel, right |
| **UM** | Universal module |
| **WSC** | Wheel Stopper Center |
| **WSS** | Wheel Stopper Side |

| ⑤ Style | |
|---|---|
| **1.6** | 1.6 collapse factor |
| **1.7** | 1.7 collapse factor |
| **2.2** | 2.2 collapse factor |
| **2.2 G** | 2.2 collapse factor, guided |
| **A90** | Angle 90° to conveying direction |
| **BT** | Bearing tab |
| **DR** | Double row sprocket |
| **F1, F2, F3 …** | Collapse factor modules |
| **G** | Guided |
| **GT** | Guiding tabs |
| **HD** | Hold Down |
| **HR** | Hard removable pin |
| **Ixx** | xx = indent in mm |
| **RG** | Reversed guided |
| **SG** | Side guard |
| **SP** | Split sprocket |
| **ST** | Strong |
| **V2** | Version 2 indicates a design update |

| ⑥ Material | |
|---|---|
| **PA** | Polyamide |
| **PA-FR** | Polyamide flame retadant |
| **PA-FRHC** | Polyamide, flame retadant, high conductive |
| **PA-HT** | Polyamide high temperature |
| **PBT** | Polybutylenterephthalate |
| **PE** | Polyethylene |
| **PE-I** | PE impact resistant |
| **PE-MD** | PE metal detectable |
| **PK** | Wear & impact improved polymer |
| **PLX** | Special PK for pins with small diameter – higher stiffness |
| **POM** | Polyoxymethylene (Polyacetal) |
| **POM-CR** | POM cut resistant |
| **POM-HC** | POM highly conductive |
| **POM-MD** | POM metal detectable |
| **POM-PE** | POM side modules + PE center modules |
| **POM-PP** | POM side modules + PP center modules |
| **PP** | Polypropylene |
| **PP-MD** | PP metal detectable |
| **PP-SW** | PP steam and hot water resistant |
| **PXX-HC** | Self-extinguishing highly conductive material |
| **R1** | TPE 80 Shore A, PP |
| **R2** | EPDM 80 Shore A, vulcanized |
| **R3** | TPE 70 Shore A, POM |
| **R4** | TPE 86 Shore A, PP |
| **R5** | TPE 52 Shore A, PP |
| **R6** | TPE 63 Shore A, POM |
| **R7** | TPE 50 Shore A, PP |
| **R8** | TPE 55 Shore A, PE |
| **R11** | TPE 50 Shore A, POM |
| **SER** | Self-extinguishing TPE |
| **SS** | Stainless steel |
| **SSS** | Stainless steel acid resistant |
| **TPC1** | Themoplastic Copolyester |
| **-HA** | Supports the HACCP concept |
| **HW** | High Wear resistant material |

| ⑦ Color* | |
|---|---|
| **AT** | Anthracite |
| **BG** | Beige |
| **BK** | Black |
| **BL** | Blue |
| **DB** | Dark blue |
| **GN** | Green |
| **LB** | Light blue |
| **LG** | Light gray |
| **OR** | Orange |
| **RE** | Red |
| **TQ** | Turquoise |
| **UC** | Uncolored |
| **WT** | White |
| **YL** | Yellow |

| ⑧ Height/Diameter/ Bore size and style |
|---|
| Height in mm (in)<br>Format: Hxxx<br>Pin diameter in mm (in)<br>Format: Dxxx |
| Bore size: SQ (= square) or RD (= round) either in mm or inches<br>Format: SQxxMM or RDxxIN |

| ⑨ Length/Width |
|---|
| Pins Length in mm (in)<br>Format: Lxxx<br>Module width in mm (in)<br>Format: Wxxx<br>REL in mm one decimal<br>Format: Wx.x |

* For each series' standard colors please refer to the table of materials for each belt (chapter 1.2). A number of other colors are available on request. Colors can vary from the original due to the print, production processes or material used.