EXCERPT FROM PROLINK ENGINEERING MANUAL

05/26 (Ref-No. 888)

siegling prolink
modular belts

SERIES 1

Straight running belts
Pitch 50 mm (1.97 in)

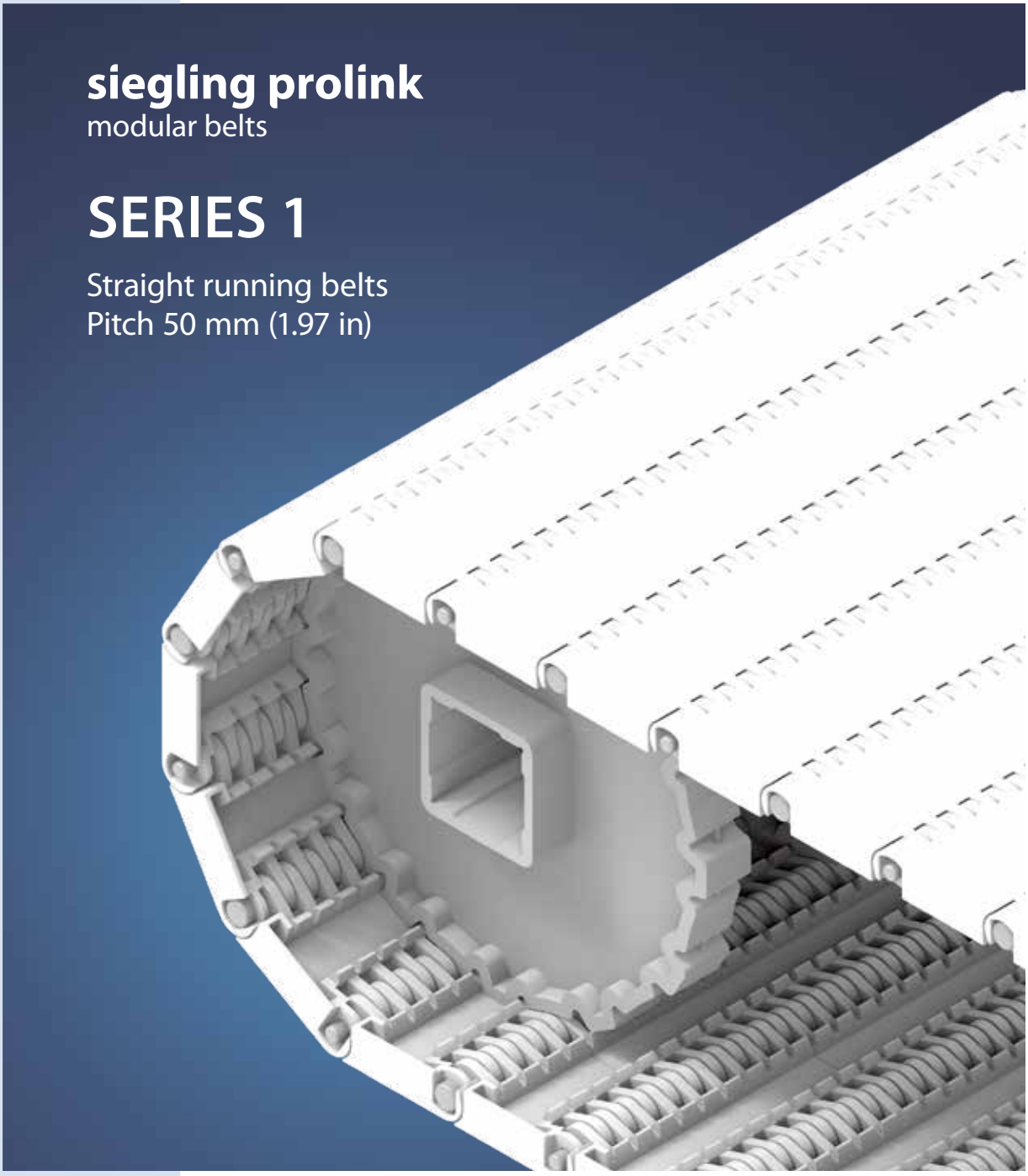

Forbo Siegling GmbH
Lilienthalstraße 6/8, D-30179 Hannover
Telefon +49 511 6704 0
www.forbo-siegling.com, siegling@forbo.com

Ref. no. 888-1_1.2_S1

SERIES 1 | **OVERVIEW**

Straight running belts | Pitch 50 mm (1.97 in)

siegling prolink
modular belts

Belts for medium to heavy-duty industrial conveying applications

Side view scale 1:1

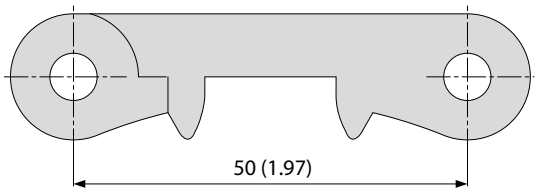

Available surface pattern and opening area

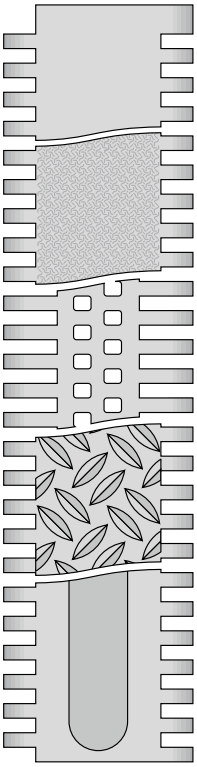

S1-0 FLT
Closed, smooth surface

S1-0 SRS
Closed, slip-resistant surface

S1-18 FLT
Open (18 %), smooth surface

S1-0 NSK
Closed surface and non skid pattern

S1-0 FRT1
Closed surface with friction top

Design characteristics

- Narrow, closed hinge design provides high belt pull capacity
- Rigid module design makes belt suitable for long conveyors
- Closed solid edge design

Basic data

Pitch	50 mm (1.97 in)
Belt width min.	80 mm (3.15 in) 250 mm (9.8 in) for belts with FRT-pattern (side modules only available without FRT-pattern)
Width increments	10 mm (0.4 in)
Hinge pins	6 mm (0.24 in) made of plastic (PBT, PP, PE). One-piece up to a belt width of 1200 mm (47 in).

Sprockets
in different sizes with round or square bore

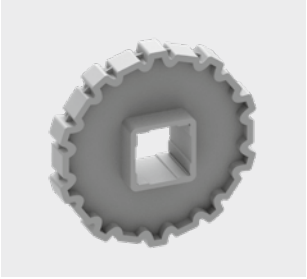

Profiles
in different heights and designs for inclines

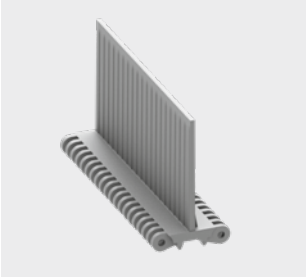

Side guards
in different heights for retention of bulk products



SERIES 1 | **BELT TYPES**

siegling prolink
modular belts

Straight running belt | Pitch 50 mm (1.97 in)

S1-0 FLT | 0 % Opening | Flat top

Closed, smooth surface | Flat top surface



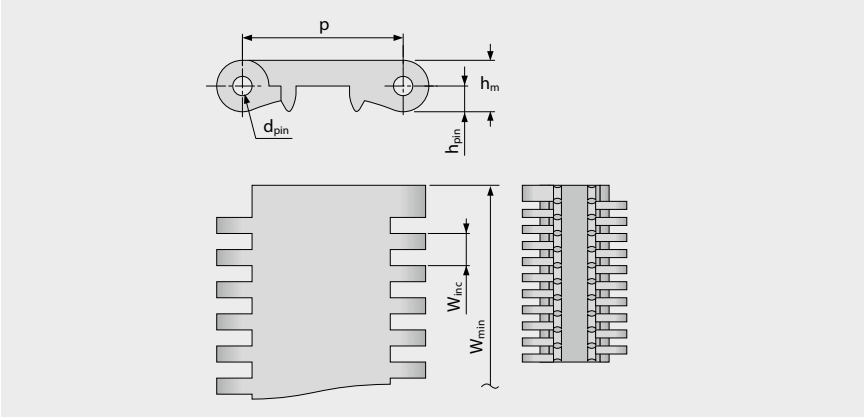

Belt dimensions

	p	d_{pin}	h_m	h_{pin}	h_s	W_{min}	W_{inc}	W_{tol}	Minimum flex radii[1]				
	Pitch	Pin Ø	Thickness	Pin position	Height	Width min.	Width Increment	Width tolerance [%]	r1 C_c x W_B	r2	r3	r4	r5
mm	50.0	6.0	16.0	8.0	0.0	80.0	10.0	±0.2	–	50.0	100.0	150.0	50.0
inch	1.97	0.24	0.63	0.31	0.0	3.15	0.39	±0.2	–	1.97	3.94	5.91	1.97

Available standard materials [3]

Belt		Pin		Nominal belt pull, straight		Weight		Width deviation	Temperature		Certificates[2]		
Material	Color	Material	Color	[N/mm]	[lb/ft]	[kg/m²]	[lb/ft²]	[%]	[°C]	[°F]	FDA	EU	MHLW
PE	WT	PE	UC	18	1233	10.1	2.07	-0.35	-70/65	-94/149	●	●	●
POM	WT	PBT	UC	40	2741	14.4	2.95	-0.75	-45/90	-49/194	●	●	●
POM	AT	PBT	UC	40	2741	14.4	2.95	-0.75	-45/90	-49/194			
PP	WT	PP	WT	30	2056	9.4	1.93	0.0	5/100	41/212	●	●	●
PP	AT	PP	WT	30	2056	9.4	1.93	0.0	5/100	41/212			

■ AT (Anthracite), ■ BK (Black), □ UC (Uncolored), □ WT (White)

All measurements and tolerances apply at 21 °C; for temperature deviations please see Prolink manual chapter 4.4 "Temperature influence".
All imperial dimensions (inches) are rounded off.

[1] Flex radii: r1 = side flex, r2 = front flex on roller, r3 = back flex on load bearing roller, r4 = back flex on Hold Down shoe, r5 = back flex on roller

[2] Complies with FDA 21 CFR | Complies with (EU) 10/2011 and (EC) 1935/2004 regulations regarding the raw materials used and the migration thresholds | Complies with Japanese MHLW Notification 370
● = available | – = not available | empty cells = not tested

[3] More materials and colors on request

Forbo
MOVEMENT SYSTEMS

SERIES 1 | **BELT TYPES**

siegling prolink
modular belts

Straight running belt | Pitch 50 mm (1.97 in)

S1-0 SRS | 0 % Opening | Slip-resistant surface

Closed surface | Slip-resistant surface, pleasant to walk and kneel on

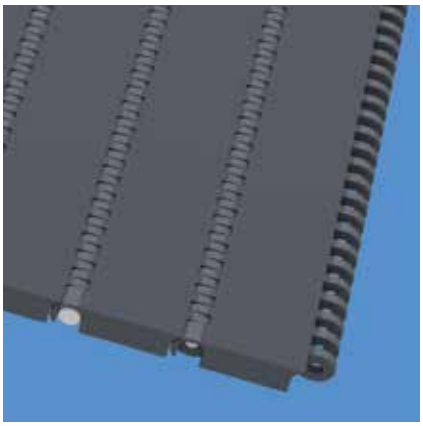

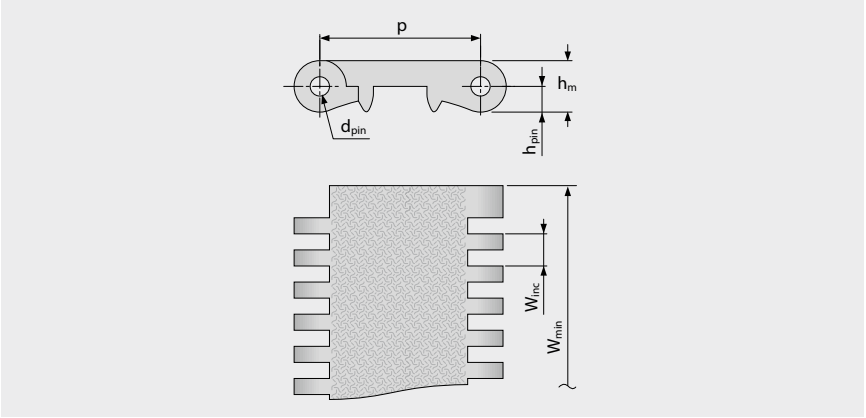

Belt dimensions

	p	d_{pin}	h_m	h_{pin}	h_s	W_{min}	W_{inc}	W_{tol}	Minimum flex radii[1]				
	Pitch	Pin Ø	Thickness	Pin position	Height	Width min.	Width Increment	Width tolerance [%]	r1 C_c x W_B	r2	r3	r4	r5
mm	50.0	6.0	16.0	8.0	0.0	80.0	10.0	±0.2	–	50.0	100.0	150.0	50.0
inch	1.97	0.24	0.63	0.31	0.0	3.15	0.39	±0.2	–	1.97	3.94	5.91	1.97

Mold to order belts [3]

Belt		Pin		Nominal belt pull, straight		Weight		Width deviation	Temperature		Certificates[2]		
Material	Color	Material	Color	[N/mm]	[lb/ft]	[kg/m²]	[lb/ft²]	[%]	[°C]	[°F]	FDA	EU	MHLW
POM	AT	PBT	UC	40	2741	14.4	2.95	-0.75	-45/90	-49/194			
POM-HC	AT	PBT	UC	40	2741	14.8	3.03	-0.75	-45/90	-49/194	–	–	
PXX-HC	BK	PBT	UC	20	1370	10.3	2.11	0.0	5/100	41/212	–	–	

■ AT (Anthracite), ■ BK (Black), □ UC (Uncolored)

All measurements and tolerances apply at 21 °C; for temperature deviations please see Prolink manual chapter 4.4 "Temperature influence".
All imperial dimensions (inches) are rounded off.

[1] Flex radii: r1 = side flex, r2 = front flex on roller, r3 = back flex on load bearing roller, r4 = back flex on Hold Down shoe, r5 = back flex on roller

[2] Complies with FDA 21 CFR | Complies with (EU) 10/2011 and (EC) 1935/2004 regulations regarding the raw materials used and the migration thresholds | Complies with Japanese MHLW Notification 370

● = available | – = not available | empty cells = not tested

[3] More materials and colors on request

Forbo
MOVEMENT SYSTEMS

SERIES 1 | **BELT TYPES**

siegling prolink
modular belts

Straight running belt | Pitch 50 mm (1.97 in)

S1-18 FLT | 18 % Opening | Flat top

Open version (18 %) for excellent air circulation and drainage | 66 % contact area (Largest opening: 4.6 x 6 mm/0.18 x 0.24 in) | Flat top surface | Smooth surface

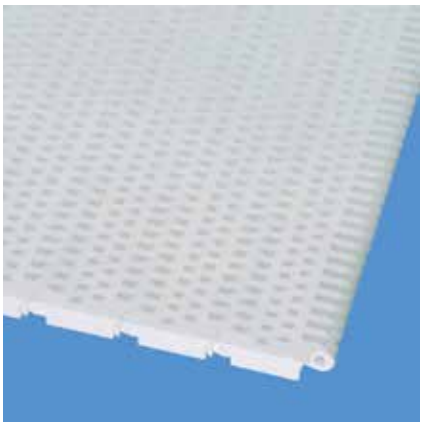

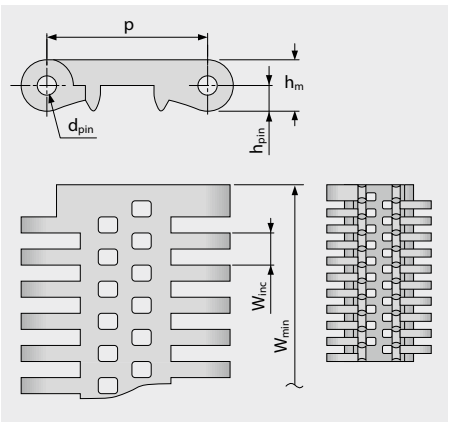

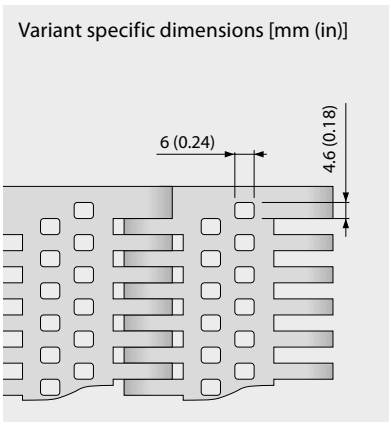

Belt dimensions

	p	d_{pin}	h_m	h_{pin}	h_s	W_{min}	W_{inc}	W_{tol}	Minimum flex radii[1]				
	Pitch	Pin Ø	Thickness	Pin position	Height	Width min.	Width Increment	Width tolerance [%]	r1 C_c x W_B	r2	r3	r4	r5
mm	50.0	6.0	16.0	8.0	0.0	80.0	10.0	±0.2	–	50.0	100.0	150.0	50.0
inch	1.97	0.24	0.63	0.31	0.0	3.15	0.39	±0.2	–	1.97	3.94	5.91	1.97

Available standard materials [3]

Belt		Pin		Nominal belt pull, straight		Weight		Width deviation	Temperature		Certificates[2]		
Material	Color	Material	Color	[N/mm]	[lb/ft]	[kg/m²]	[lb/ft²]	[%]	[°C]	[°F]	FDA	EU	MHLW
PE	UC	PE	UC	18	1233	8.8	1.80	0.15	-70/65	-94/149	●	●	●
Mold to order belts													
POM	WT	PBT	UC	40	2741	12.7	2.60	-0.7	-45/90	-49/194	●	●	●
PP	WT	PP	WT	30	2056	8.2	1.68	0.0	5/100	41/212	●	●	●

☐ UC (Uncolored), ☐ WT (White)

All measurements and tolerances apply at 21 °C; for temperature deviations please see Prolink manual chapter 4.4 "Temperature influence".
All imperial dimensions (inches) are rounded off.

[1] Flex radii: r1 = side flex, r2 = front flex on roller, r3 = back flex on load bearing roller, r4 = back flex on Hold Down shoe, r5 = back flex on roller

[2] Complies with FDA 21 CFR | Complies with (EU) 10/2011 and (EC) 1935/2004 regulations regarding the raw materials used and the migration thresholds | Complies with Japanese MHLW Notification 370

● = available | – = not available | empty cells = not tested

[3] More materials and colors on request

Forbo
MOVEMENT SYSTEMS

SERIES 1 | **BELT TYPES**

siegling prolink
modular belts

Straight running belt | Pitch 50 mm (1.97 in)

S1-0 NSK | 0 % Opening | Non skid

Closed surface | Non skid surface for increased safety when walking on belt

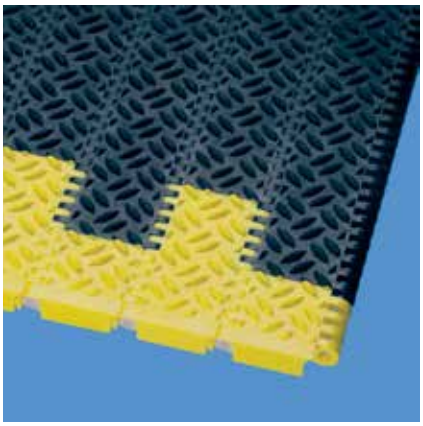

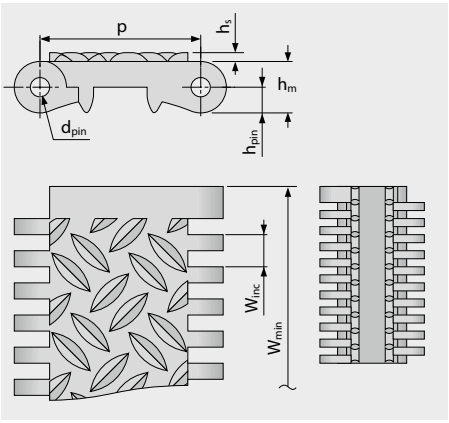

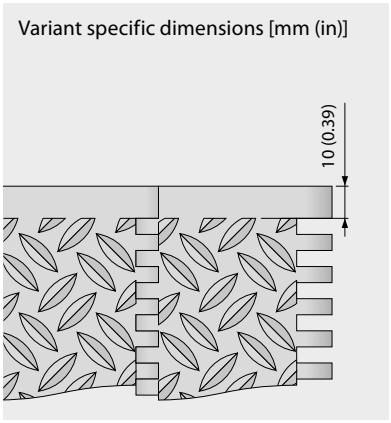

Belt dimensions

	p	d_{pin}	h_m	h_{pin}	h_s	W_{min}	W_{inc}	W_{tol}	Minimum flex radii[1]				
	Pitch	Pin Ø	Thickness	Pin position	Height	Width min.	Width Increment	Width tolerance [%]	r1 C_c x W_B	r2	r3	r4	r5
mm	50.0	6.0	16.0	8.0	2.8	80.0	10.0	±0.2	–	50.0	100.0	150.0	50.0
inch	1.97	0.24	0.63	0.31	0.11	3.15	0.39	±0.2	–	1.97	3.94	5.91	1.97

Available standard materials [3]

Belt		Pin		Nominal belt pull, straight		Weight		Width deviation	Temperature		Certificates[2]		
Material	Color	Material	Color	[N/mm]	[lb/ft]	[kg/m²]	[lb/ft²]	[%]	[°C]	[°F]	FDA	EU	MHLW
POM	AT	PBT	UC	40	2741	16.0	3.28	-0.75	-45/90	-49/194			
POM	YL	PBT	UC	40	2741	16.0	3.28	-0.75	-45/90	-49/194			
POM-HC	AT	PBT	UC	40	2741	16.0	3.28	-0.75	-45/90	-49/194	–	–	

■ AT (Anthracite), □ UC (Uncolored), ■ YL (Yellow)

All measurements and tolerances apply at 21 °C; for temperature deviations please see Prolink manual chapter 4.4 "Temperature influence".
All imperial dimensions (inches) are rounded off.

[1] Flex radii: r1 = side flex, r2 = front flex on roller, r3 = back flex on load bearing roller, r4 = back flex on Hold Down shoe, r5 = back flex on roller

[2] Complies with FDA 21 CFR | Complies with (EU) 10/2011 and (EC) 1935/2004 regulations regarding the raw materials used and the migration thresholds | Complies with Japanese MHLW Notification 370

● = available | – = not available | empty cells = not tested

[3] More materials and colors on request

Forbo
MOVEMENT SYSTEMS

SERIES 1 | **BELT TYPES**

siegling prolink
modular belts

Straight running belt | Pitch 50 mm (1.97 in)

S1-0 FRT1 | 0 % Opening | Friction top (Design 1)

Closed surface | Friction top with replaceable rubber pads for increased grip



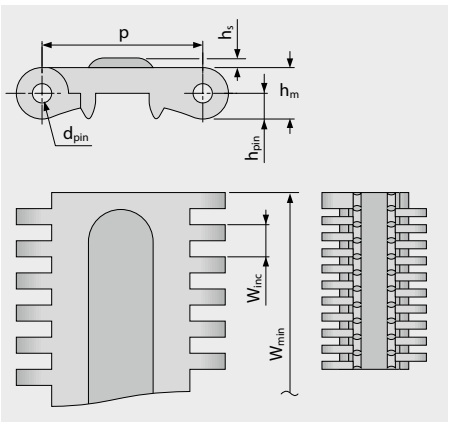

Variant specific dimensions [mm (in)]

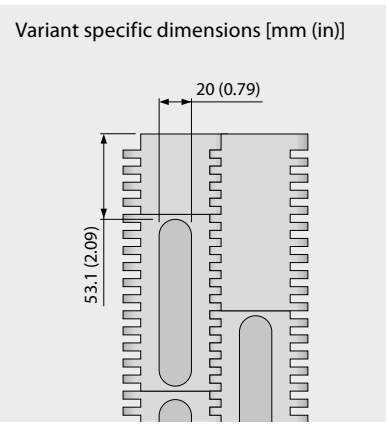

Belt dimensions

	p	d_{pin}	h_m	h_{pin}	h_s	W_{min}	W_{inc}	W_{tol}	Minimum flex radii[1]				
	Pitch	Pin Ø	Thickness	Pin position	Height	Width min.	Width Increment	Width tolerance [%]	r1 C_c x W_B	r2	r3	r4	r5
mm	50.0	6.0	16.0	8.0	3.0	250.0	10.0	±0.2	–	50.0	100.0	150.0	50.0
inch	1.97	0.24	0.63	0.31	0.12	9.84	0.39	±0.2	–	1.97	3.94	5.91	1.97

Available standard materials [3]

Belt		Pin		Rubber		Nominal belt pull, straight		Weight		Width deviation	Temperature		Certificates[2]		
Material	Color	Material	Color	Material	Color	[N/mm]	[lb/ft]	[kg/m²]	[lb/ft²]	[%]	[°C]	[°F]	FDA	EU	MHLW
POM	WT	PBT	UC	R2	BK	40	2741	15.0	3.07	-0.75	-45/90	-49/194	–	–	

■ BK (Black), □ UC (Uncolored), □ WT (White)

All measurements and tolerances apply at 21 °C; for temperature deviations please see Prolink manual chapter 4.4 "Temperature influence".
All imperial dimensions (inches) are rounded off.

[1] Flex radii: r1 = side flex, r2 = front flex on roller, r3 = back flex on load bearing roller, r4 = back flex on Hold Down shoe, r5 = back flex on roller

[2] Complies with FDA 21 CFR | Complies with (EU) 10/2011 and (EC) 1935/2004 regulations regarding the raw materials used and the migration thresholds | Complies with Japanese MHLW Notification 370

● = available | – = not available | empty cells = not tested

[3] More materials and colors on request

Forbo
MOVEMENT SYSTEMS

S1 SPR | Sprockets

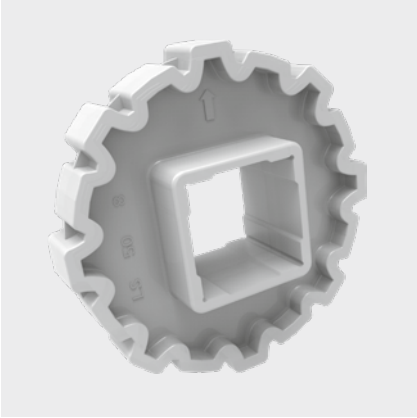

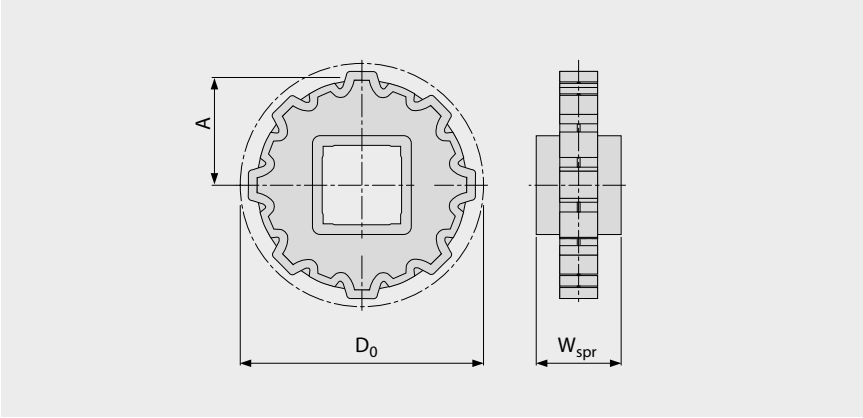

Main dimensions

Sprocket size (Number of teeth)		Z6	Z8	Z10	Z12	Z16
W_{spr}	mm	40.0	40.0	40.0	40.0	40.0
	inch	1.57	1.57	1.57	1.57	1.57
D_0	mm	100.0	130.8	161.8	193.2	256.3
	inch	3.94	5.15	6.37	7.61	10.09
A_{max}	mm	42.0	57.4	72.9	88.6	120.1
	inch	1.65	2.26	2.87	3.49	4.73
A_{min}	mm	36.4	53.0	69.3	85.6	117.8
	inch	1.43	2.09	2.73	3.37	4.64

Shaft bores (● = Round, ■ = Square; ❍ or ❑ = mold to order)

25	mm			❍		
30	mm	❍	●	●		
40	mm	■	■	■	■	■
60	mm		■	■	■	■
80	mm				■	■
1	inch	❍	❍	❍		
1.5	inch	❑	■	■	❑	
2.5	inch				❑	❑

Material: POM, Color: UC

UC (Uncolored)

All measurements and tolerances apply at 21 °C.
All imperial dimensions (inches) are rounded off.
For detailed sprocket and shaft dimensions see appendix 6.3
Number of sprockets (sprocket spacing distance) see chapter 3.2

Straight running belt | Pitch 50 mm (1.97 in)

S1-0 FLT PMC

Flat top surface for dry products | No cling surface to improve release of wet and sticky products



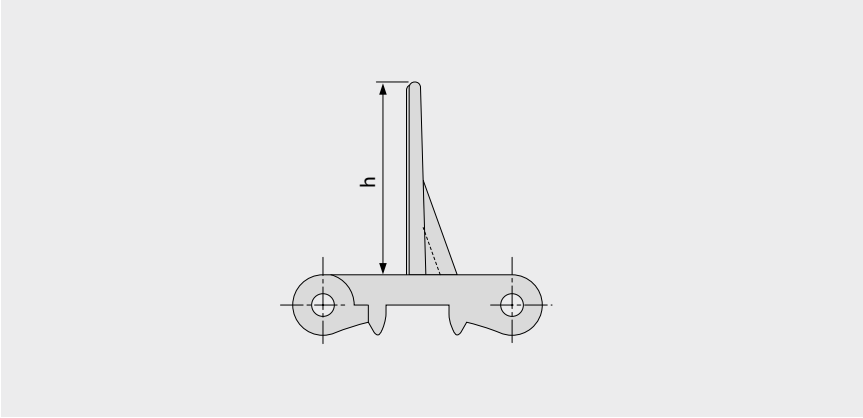

Basic data

Material	Color	Height (h)	
		50 mm 2 inch	100 mm 4 inch
PE	WT	●	●
POM	AT	●	
POM	WT	●	●
PP	WT	●	●

Molded width: 200 mm (7.9 in)

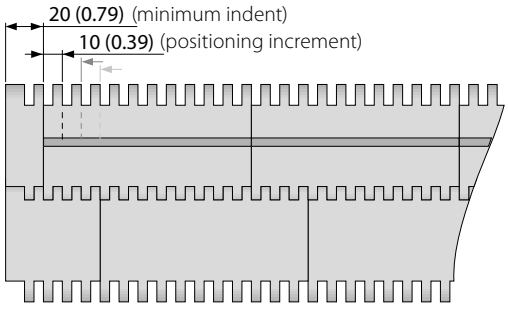

Standard configuration S1-0 FLT PMC

■ AT (Anthracite), □ WT (White)

All measurements and tolerances apply at 21 °C; for temperature deviations please see Prolink manual chapter 4.4 "Temperature influence".
All imperial dimensions (inches) are rounded off.
Note: Use of accessory in a belt may impact on the minimum design radii. Please see chapter 6.3 for further information.

Straight running belt | Pitch 50 mm (1.97 in)

S1-18 FLT PMC

Open verson (18 %) base module for drainage | No cling surface to improve release of wet and sticky products



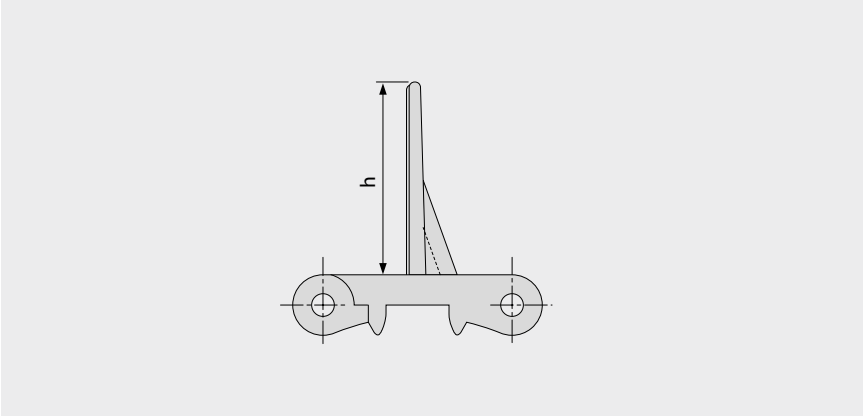

Basic data

Material	Color	Height (h)	
		50 mm 2 inch	100 mm 4 inch
PE	UC	●	●
POM	WT	mold to order	mold to order
PP	WT	mold to order	mold to order

Molded width: 200 mm (7.9 in)

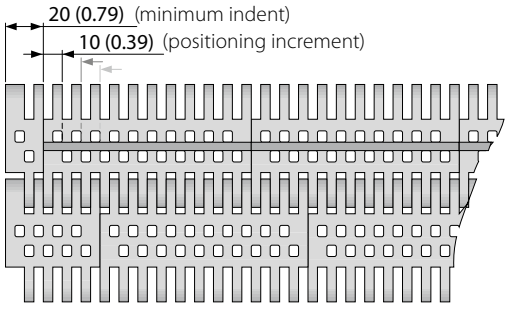

Standard configuration S1-18 FLT PMC

☐ UC (Uncolored), ☐ WT (White)

All measurements and tolerances apply at 21 °C; for temperature deviations please see Prolink manual chapter 4.4 "Temperature influence".
All imperial dimensions (inches) are rounded off.
Note: Use of accessory in a belt may impact on the minimum design radii. Please see chapter 6.3 for further information.

Straight running belt | Pitch 50 mm (1.97 in)

S1 SG | Side guards

For retention of bulk products (only for modules h_s = 0 mm/in)

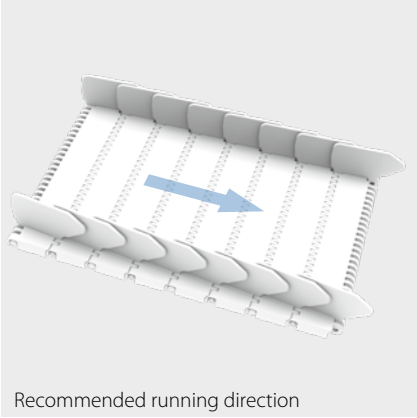

Recommended running direction

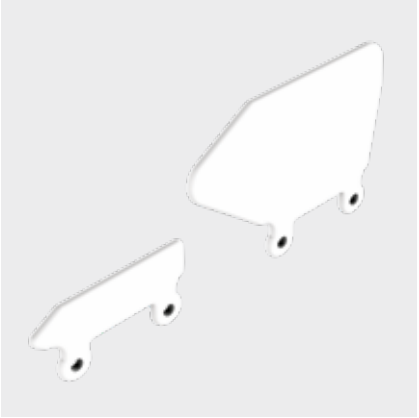

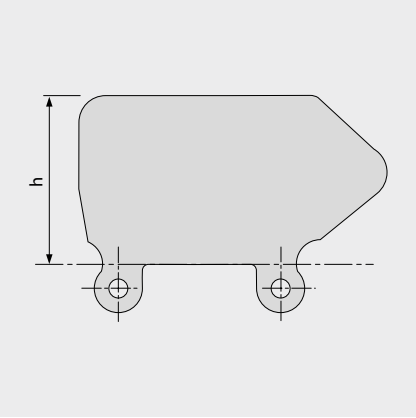

Basic data

Material	Color	Height (h)			
		25 mm 1 inch	50 mm 2 inch	75 mm 3 inch	100 mm 4 inch
PE	LB	●	●	●	●
PE	WT	●	●	●	●
PE-MD	BL		mold to order	●	●
PP	LB	mold to order	●	●	●
PP	WT	●	●	●	●

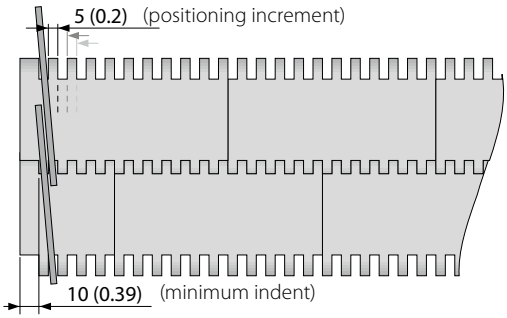

BL (Blue), LB (Light blue), WT (White)

All measurements and tolerances apply at 21 °C; for temperature deviations please see Prolink manual chapter 4.4 "Temperature influence".
All imperial dimensions (inches) are rounded off.
Note: Use of accessory in a belt may impact on the minimum design radii. Please see chapter 6.3 for further information.

LEGEND

① Series
S1 … S19

② Open area/Sprocket size
Percentage open area Format: xx E.g. 20 = 20 %
For sprockets: number of teeth Format: "Z"xx E.g. Z12 = 12 teeth

③ Surface pattern	
BSL	Base module for slider
CTP	Cone top
CUT	Curved top
FLT	Flat top (smooth)
FRT-OG	Friction top without High Grip insert
FRT(X)	Friction top (Design X)
GRT	Grid top
HDK	High Deck
LRB	Lateral rib
MOD	Modified module shape
NCL	No cling
NPY	Negative pyramid
NSK	Non skid
NSK2	Non skid, nonwoven variant
NTP	Nub top (round studs)
PRR	Pin Retained Rollers
RAT	Radius top
RRB	Raised rib
RSA	Reduced surface area
RTP	Roller top
SRS	Slip-resistant surface

④ Type	
BPU	Bucket profile
CAP	Pin lock & belt edge sealing
CCW	Counter clockwise
CLP	Clip
CM	Center module
CW	Clockwise
FPL	Finger plate
HDT	Hold Down Tab
IDL	Idler
INS	Insert
PIN	Coupling rod
PMC	Profile module center
PMU	Profile module universal
PSP	ProSnap
PSU-0	Prof. scoop uni. closed
PSU-X	Prof. scoop uni. x% open
RI	High Grip insert
REL	Reinforcement Link (SS)
ROL	Rollers
RTR	Retaining ring
SG	Module with sideguard
SGL	Side guard, left
SGR	Side guard, right
SLI	Slider
SMA	Side module, A side
SMB	Side module, B side
SML	Side module, left
SMR	Side module, right
SMT	Side module, tight radius
SMU	Side module, universal/both sides
SPR	Sprocket
SPR-SP	Split sprocket, 2-part
SSL	Self stacker side module, left
SSR	Self stacker side module, right
TPL	Turning panel, left
TPR	Turning panel, right
UM	Universal module
WSC	Wheel Stopper Center
WSS	Wheel Stopper Side

⑤ Style	
1.6	1.6 collapse factor
1.7	1.7 collapse factor
2.2	2.2 collapse factor
2.2 G	2.2 collapse factor, guided
A90	Angle 90° to conveying direction
BT	Bearing tab
DR	Double row sprocket
F1, F2, F3 …	Collapse factor modules
G	Guided
GT	Guiding tabs
HD	Hold Down
HR	Hard removable pin
Ixx	xx = indent in mm
RG	Reversed guided
SG	Side guard
SP	Split sprocket
ST	Strong
V2	Version 2 indicates a design update

⑥ Material	
PA	Polyamide
PA-FR	Polyamide flame retadant
PA-FRHC	Polyamide, flame retadant, high conductive
PA-HT	Polyamide high temperature
PBT	Polybutylenterephthalate
PE	Polyethylene
PE-I	PE impact resistant
PE-MD	PE metal detectable
PK	Wear & impact improved polymer
PLX	Special PK for pins with small diameter – higher stiffness
POM	Polyoxymethylene (Polyacetal)
POM-CR	POM cut resistant
POM-HC	POM highly conductive
POM-MD	POM metal detectable
POM-PE	POM side modules + PE center modules
POM-PP	POM side modules + PP center modules
PP	Polypropylene
PP-MD	PP metal detectable
PP-SW	PP steam and hot water resistant
PXX-HC	Self-extinguishing highly conductive material
R1	TPE 80 Shore A, PP
R2	EPDM 80 Shore A, vulcanized
R3	TPE 70 Shore A, POM
R4	TPE 86 Shore A, PP
R5	TPE 52 Shore A, PP
R6	TPE 63 Shore A, POM
R7	TPE 50 Shore A, PP
R8	TPE 55 Shore A, PE
R11	TPE 50 Shore A, POM
SER	Self-extinguishing TPE
SS	Stainless steel
SSS	Stainless steel acid resistant
TPC1	Themoplastic Copolyester
-HA	Supports the HACCP concept
HW	High Wear resistant material

⑦ Color*	
AT	Anthracite
BG	Beige
BK	Black
BL	Blue
DB	Dark blue
GN	Green
LB	Light blue
LG	Light gray
OR	Orange
RE	Red
TQ	Turquoise
UC	Uncolored
WT	White
YL	Yellow

⑧ Height/Diameter/ Bore size and style
Height in mm (in) Format: Hxxx Pin diameter in mm (in) Format: Dxxx
Bore size: SQ (= square) or RD (= round) either in mm or inches Format: SQxxMM or RDxxIN

⑨ Length/Width
Pins Length in mm (in) Format: Lxxx Module width in mm (in) Format: Wxxx REL in mm one decimal Format: Wx.x

* For each series' standard colors please refer to the table of materials for each belt (chapter 1.2). A number of other colors are available on request. Colors can vary from the original due to the print, production processes or material used.