EXCERPT FROM PROLINK ENGINEERING MANUAL

05/26 (Ref-No. 888)

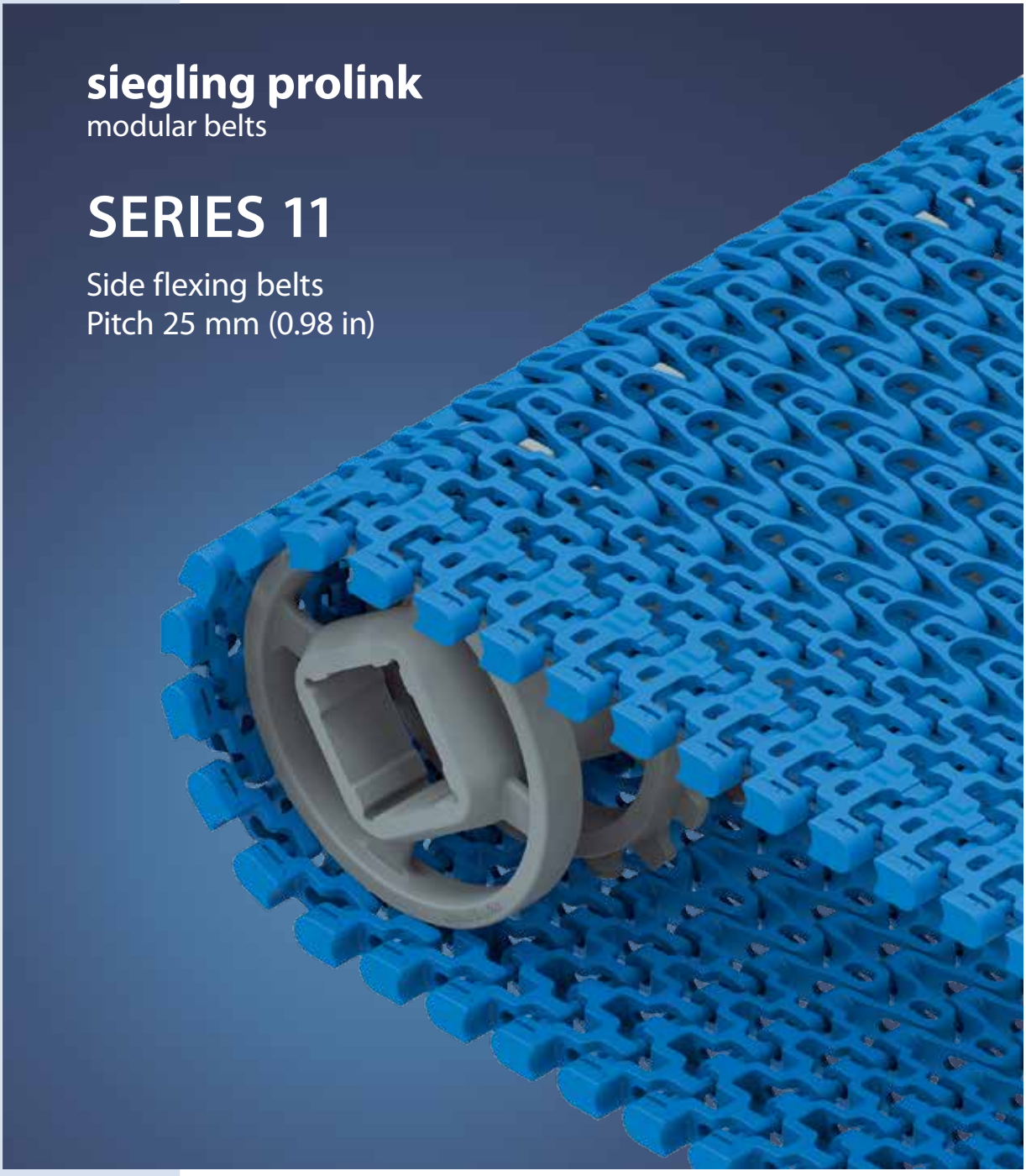

Forbo Siegling GmbH
Lilienthalstraße 6/8, D-30179 Hannover
Telefon +49 511 6704 0
www.forbo-siegling.com, siegling@forbo.com

Ref. no. 888-1_1.2_S11

SERIES 11 | **OVERVIEW**

Side flexing belts | Pitch 25 mm (0.98 in)

siegling prolink
modular belts

Belts for light-duty food and non-food applications

Side view scale 1:1

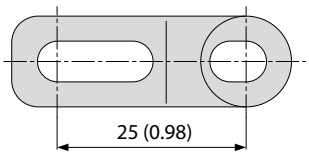

Design characteristics

- 45 % open area provides excellent cooling and draining capabilities
- All plastic lightweight belts (plastic pins)
- Tight radius belt with minimum curve radius of 1.4 x belt width
- Outermost hinge is fixed to the pin to prevent deflection and elimination of potential belt edge catch points
- Suitable for both straight and radius conveying
- Ideal transmission of force due to sprockets offset inwards. Idlers support the belt on the outside

Basic data

Pitch	25 mm (0.98 in)
Belt width min.	175 mm (6.9 in)
Belt width max.	1000 mm (39.37 in)
Width increments	25 mm (0.98 in)
Hinge pins	5 mm (0.2 in) made of plastic (PBT) Combo: 5 mm (0.2 in) stainless steel

Available surface pattern and opening area

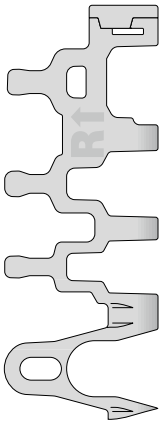

S11-45 GRT
Open (45 %), lattice-shaped surface with replaceable caps

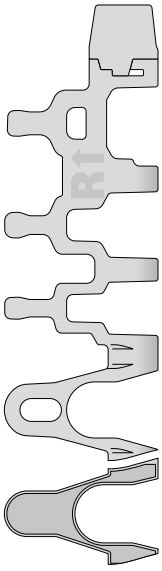

S11-45 GRT HD
Open (45 %), lattice-shaped surface with replaceable Hold Down caps

S11-33 FRT2
Open (33 % for full FRT2 surface area), surface with friction top, flat

Sprockets/Idlers
in different sizes with round or square bore

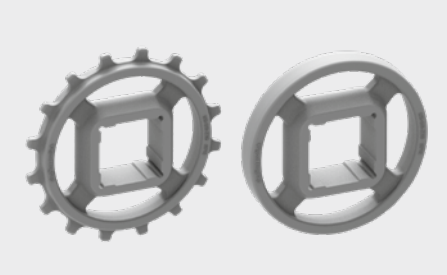

Profiles
in different heights and designs for inclines



SERIES 11 | **BELT TYPES**

siegling prolink
modular belts

Side flexing belt | Pitch 25 mm (0.98 in) | $C_c = 1.4$

S11-45 GRT | 45 % Opening | Grid top

Open area (45 %) for excellent air circulation and drainage | 42 % contact area (Largest opening: Ø = 9.2 mm/0.36 in) | Lattice-shaped surface with robust, replaceable caps on the belt edges | Collapse factor (C_c) = 1.4

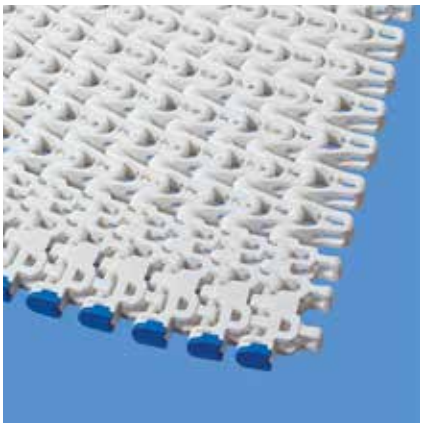

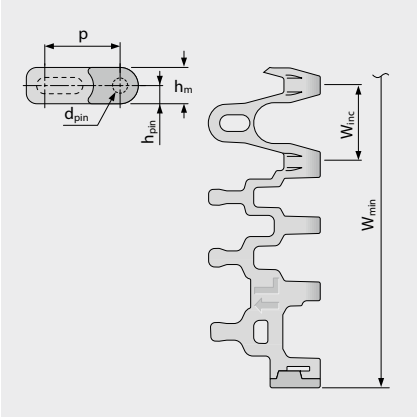

Variant specific dimensions [mm (in)]

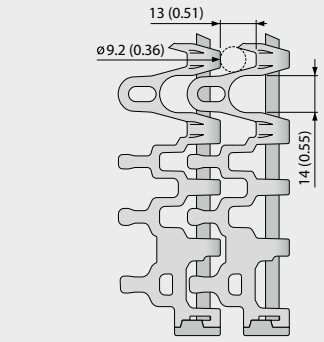

Belt dimensions

	p	d_{pin}	h_m	h_{pin}	h_s	W_{min}	W_{inc}	W_{tol}	Minimum flex radii[1]				
	Pitch	Pin Ø	Thickness	Pin position	Height	Width min.	Width Increment	Width tolerance [%]	r1 $C_c \times W_B$	r2	r3	r4	r5
mm	25.0	5.0	12.0	6.0	0.0	175.0	25.0	±0.3	1.4 x W_B	25.0	50.0	75.0	25.0
inch	0.98	0.2	0.47	0.24	0.0	6.89	0.98	±0.3	1.4 x W_B	0.98	1.97	2.95	0.98

W_B = Belt width, further information regarding r1 see page III-31

Available standard materials[3]

Belt		Pin		Nominal belt pull, straight		Nominal belt pull, curve		Weight		Width deviation	Temperature		Certificates[2]		
Material	Color	Material	Color	[N/mm]	[lb/ft]	[N]	[lb]	[kg/m²]	[lb/ft²]	[%]	[°C]	[°F]	FDA	EU	MHLW
POM-CR	WT	PBT	UC	15	1028	1000	225	6.7	1.37	0.0	-45/90	-49/194	●	●	●
POM-CR	BL	PBT	BL	15	1028	1000	225	6.7	1.37	0.0	-45/90	-49/194	●	●	●
PP	WT	PBT	UC	9	617	600	135	4.7	0.96	0.2	5/100	41/212	●	●	●
PP	BL	PBT	BL	9	617	600	135	4.7	0.96	0.2	5/100	41/212	●	●	●
Mold to order															
PA*	BL	PBT	BL	15	1028	1000	225	5.7	1.17	0.6	-40/120	-40/248	●	●	●

* Values valid for dry applications (RH <50 %). Belts in PA material will absorb water in wet environments, causing them to expand and reduce the nominal belt pull capacity.

BL (Blue), UC (Uncolored), WT (White)

All measurements and tolerances apply at 21 °C; for temperature deviations please see Prolink manual chapter 4.4 "Temperature influence".
All imperial dimensions (inches) are rounded off.

[1] Flex radii: r1 = side flex, r2 = front flex on roller, r3 = back flex on load bearing roller, r4 = back flex on Hold Down shoe, r5 = back flex on roller

[2] Complies with FDA 21 CFR | Complies with (EU) 10/2011 and (EC) 1935/2004 regulations regarding the raw materials used and the migration thresholds | Complies with Japanese MHLW Notification 370
● = available | – = not available | empty cells = not tested

[3] More materials and colors on request

Forbo
MOVEMENT SYSTEMS

SERIES 11 | **BELT TYPES**

Side flexing belt | Pitch 25 mm (0.98 in) | $C_c = 1.4$

S11-45 GRT HD | 45 % Opening | Grid top · Hold Down

Open area (45 %) for excellent air circulation and drainage | 42 % contact area (Largest opening: Ø = 9.2 mm/0.36 in) | Lattice-shaped surface with replaceable Hold Down caps | Collapse factor (C_c) = 1.4

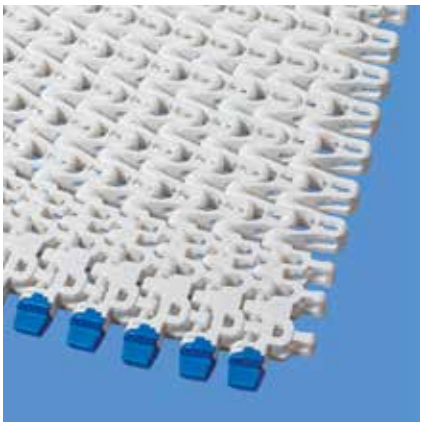

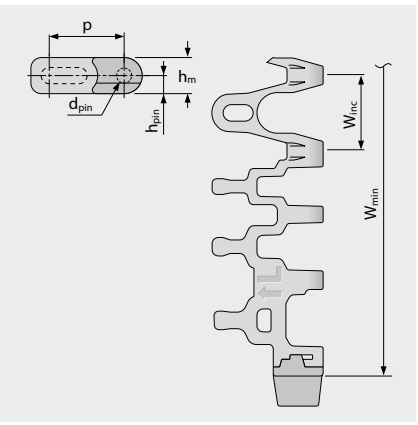

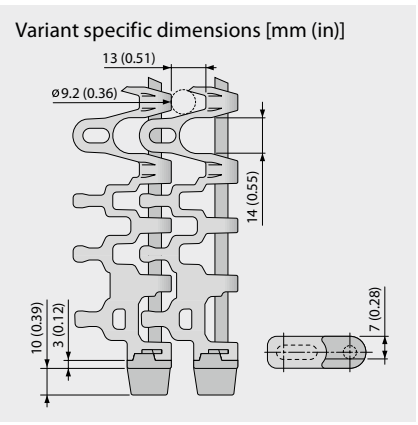

Belt dimensions

	p	d_{pin}	h_m	h_{pin}	h_s	W_{min}	W_{inc}	W_{tol}	Minimum flex radii[1]				
	Pitch	Pin Ø	Thickness	Pin position	Height	Width min.	Width Increment	Width tolerance [%]	r1 $C_c \times W_B$	r2	r3	r4	r5
mm	25.0	5.0	12.0	6.0	0.0	175.0	25.0	±0.3	1.4 x W_B	25.0	50.0	75.0	25.0
inch	0.98	0.2	0.47	0.24	0.0	6.89	0.98	±0.3	1.4 x W_B	0.98	1.97	2.95	0.98

W_B = Belt width, further information regarding r1 see page III-31

Available standard materials [3]

Belt		Pin		Nominal belt pull, straight		Nominal belt pull, curve		Weight		Width deviation	Temperature		Certificates[2]		
Material	Color	Material	Color	[N/mm]	[lb/ft]	[N]	[lb]	[kg/m²]	[lb/ft²]	[%]	[°C]	[°F]	FDA	EU	MHLW
POM-CR	WT	PBT	UC	15	1028	1000	225	6.7	1.37	0.0	-45/90	-49/194	●	●	●
POM-CR	BL	PBT	BL	15	1028	1000	225	6.7	1.37	0.0	-45/90	-49/194	●	●	●
PP	WT	PBT	UC	9	617	600	135	4.7	0.96	0.2	5/100	41/212	●	●	●
PP	BL	PBT	BL	9	617	600	135	4.7	0.96	0.2	5/100	41/212	●	●	●
Mold to order															
PA*	BL	PBT	BL	15	1028	1000	225	5.7	1.17	0.6	-40/120	-40/248	●	●	●

* Values valid for dry applications (RH <50 %). Belts in PA material will absorb water in wet environments, causing them to expand and reduce the nominal belt pull capacity.

BL (Blue), UC (Uncolored), WT (White)

All measurements and tolerances apply at 21 °C; for temperature deviations please see Prolink manual chapter 4.4 "Temperature influence".
All imperial dimensions (inches) are rounded off.

[1] Flex radii: r1 = side flex, r2 = front flex on roller, r3 = back flex on load bearing roller, r4 = back flex on Hold Down shoe, r5 = back flex on roller

[2] Complies with FDA 21 CFR | Complies with (EU) 10/2011 and (EC) 1935/2004 regulations regarding the raw materials used and the migration thresholds | Complies with Japanese MHLW Notification 370
● = available | – = not available | empty cells = not tested

[3] More materials and colors on request

SERIES 11 | **BELT TYPES**

siegling prolink
modular belts

Side flexing belt | Pitch 25 mm (0.98 in) | $C_C = 1.4$

S11-33 FRT2 | 33 % Opening | Friction top (Design 2)

Open area (33 %) for full FRT2 surface area | 47 % contact area (Largest opening: Ø = 8 mm/0.31 in) | Lattice-shaped surface with flat integrated friction pads (FRT2) for better grip. Minimum indent FRT2: 125 mm (5 in)/175 mm (7 in) | Collapse factor (C_c) = 1.4

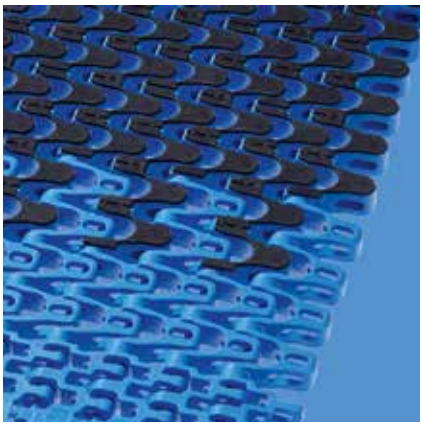

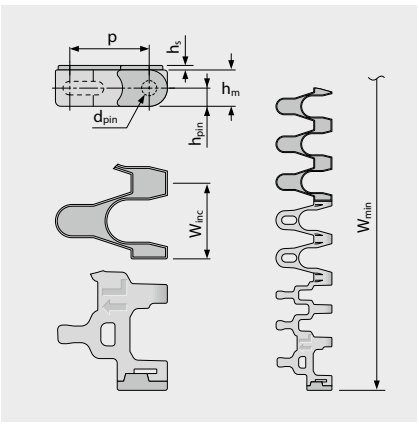

Variant specific dimensions [mm (in)]

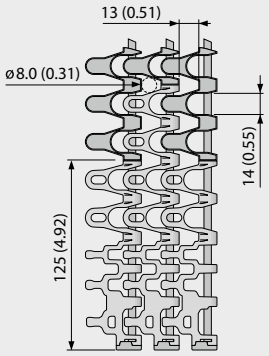

Belt dimensions

	p	d_{pin}	h_m	h_{pin}	h_s	W_{min}	W_{inc}	W_{tol}	Minimum flex radii[1]				
	Pitch	Pin Ø	Thickness	Pin position	Height	Width min.	Width Increment	Width tolerance [%]	r1 $C_c \times W_B$	r2	r3	r4	r5
mm	25.0	5.0	12.0	6.0	1.5	500.0	25.0	±0.3	1.4 x W_B	25.0	50.0	75.0	25.0
inch	0.98	0.2	0.47	0.24	0.06	19.69	0.98	±0.3	1.4 x W_B	0.98	1.97	2.95	0.98

W_B = Belt width, further information regarding r1 see page III-31

Available standard materials[3]

Belt		Pin		Rubber		Nominal belt pull, straight		Nominal belt pull, curve		Weight		Width deviation [%]	Temperature		Certificates[2]		
Material	Color	Material	Color	Material	Color	[N/mm]	[lb/ft]	[N]	[lb]	[kg/m²]	[lb/ft²]		[°C]	[°F]	FDA	EU	MHLW
PP	WT	PBT	UC	R7	BG	9	617	600	135	6.1	1.25	0.2	5/100	41/212	●	●	
PP	BL	PBT	BL	R7	BG	9	617	600	135	6.1	1.25	0.2	5/100	41/212	●	●	
PP	BL	PBT	BL	R7	BK	9	617	600	135	6.1	1.25	0.2	5/100	41/212	●	●	

■ BL (Blue), □ UC (Uncolored), □ WT (White)

All measurements and tolerances apply at 21 °C; for temperature deviations please see Prolink manual chapter 4.4 "Temperature influence".
All imperial dimensions (inches) are rounded off.

[1] Flex radii: r1 = side flex, r2 = front flex on roller, r3 = back flex on load bearing roller, r4 = back flex on Hold Down shoe, r5 = back flex on roller

[2] Complies with FDA 21 CFR | Complies with (EU) 10/2011 and (EC) 1935/2004 regulations regarding the raw materials used and the migration thresholds | Complies with Japanese MHLW Notification 370
● = available | – = not available | empty cells = not tested

[3] More materials and colors on request

Forbo
MOVEMENT SYSTEMS

S11 COMBO | **BELT TYPES**

siegling prolink
modular belts

Side flexing belt | Pitch 25 mm (0.98 in) | $C_c = 1.45$

S11/S5 ST-45 GRT CCW | 45 % Opening | Grid top | Counter clockwise or left hand curve

Combination of high belt pull capacity and small radii in one directional curve layouts | Excellent air circulation and drainage | 42 % contact area (Largest opening: Ø = 13 mm/0.51 in) | Lattice shaped surface | SS pins for high stiffness | Collapse factor (C_c) = 1.45

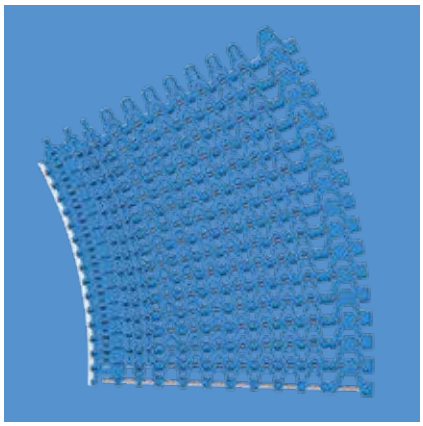

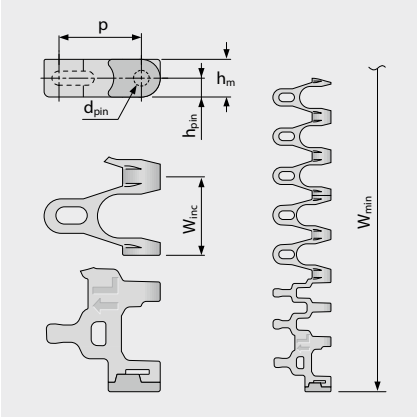

Variant specific dimensions [mm (in)]

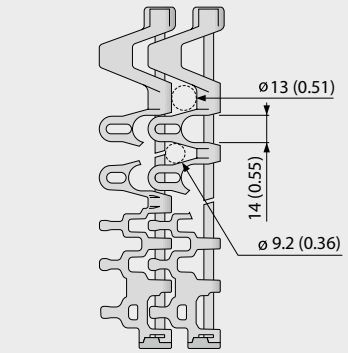

Belt dimensions

	p	d_{pin}	h_m	h_{pin}	h_s	W_{min}	W_{inc}	W_{tol}	Minimum flex radii[1]			
	Pitch	Pin Ø	Thickness	Pin position	Height	Width min.	Width Increment	Width tolerance [%]	r1 $C_c \times W_B$	r2	r3	r4	r5
mm	25.0	5.0	12.0	6.0	0.0	175.0	25.0	±0.3	1.45 x W_B	25.0	50.0	75.0	25.0
inch	0.98	0.2	0.47	0.24	0.0	6.89	0.98	±0.3	1.45 x W_B	0.98	1.97	2.95	0.98

W_B = Belt width, further information regarding r1 see page III-31

Available standard materials [3]

Belt		Pin	Nominal belt pull, straight		Nominal belt pull, curve		Weight		Width deviation	Temperature		Certificates[2]		
Material	Color	Material	[N/mm]	[lb/ft]	[N]	[lb]	[kg/m²]	[lb/ft²]	[%]	[°C]	[°F]	FDA	EU	MHLW
POM-CR	WT	SS	25	1713	2100	472	13.2	2.70	0.0	-45/90	-49/194	●	●	●
POM-CR	BL	SS	25	1713	2100	472	13.2	2.70	0.0	-45/90	-49/194	●	●	●
PP	WT	SS	18	1233	1200	270	10.2	2.09	0.2	5/100	41/212	●	●	●
PP	BL	SS	18	1233	1200	270	10.2	2.09	0.2	5/100	41/212	●	●	●
Mold to order														
PA*	BL	SS	20	1370	1680	378	13.0	2.66	0.6	-40/120	-40/248	●	●	●

* Values valid for dry applications (RH <50 %). Belts in PA material will absorb water in wet environments, causing them to expand and reduce the nominal belt pull capacity.

■ BL (Blue), □ WT (White)

All measurements and tolerances apply at 21 °C; for temperature deviations please see Prolink manual chapter 4.4 "Temperature influence".
All imperial dimensions (inches) are rounded off.

[1] Flex radii: r1 = side flex, r2 = front flex on roller, r3 = back flex on load bearing roller, r4 = back flex on Hold Down shoe, r5 = back flex on roller

[2] Complies with FDA 21 CFR | Complies with (EU) 10/2011 and (EC) 1935/2004 regulations regarding the raw materials used and the migration thresholds | Complies with Japanese MHLW Notification 370
● = available | – = not available | empty cells = not tested

[3] More materials and colors on request

Forbo
MOVEMENT SYSTEMS

S11 SPR | Sprockets



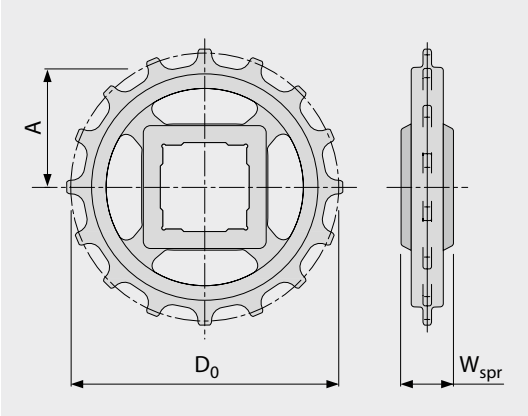

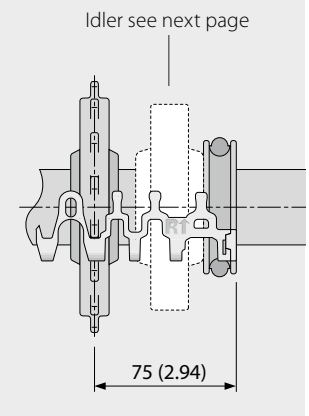

Main dimensions

Sprocket size (Number of teeth)		Z6	Z9	Z11	Z12	Z16	Z18	Z20
W_{spr}	mm	24.0	24.0	24.0	24.0	24.0	24.0	24.0
	inch	0.94	0.94	0.94	0.94	0.94	0.94	0.94
D_0	mm	49.6	72.6	88.0	95.8	127.2	142.8	158.5
	inch	1.95	2.86	3.46	3.77	5.01	5.62	6.24
A_{max}	mm	18.8	30.3	38.0	41.9	57.6	65.4	73.3
	inch	0.74	1.19	1.50	1.65	2.27	2.57	2.89
A_{min}	mm	16.3	28.5	36.5	40.5	56.5	64.4	72.4
	inch	0.64	1.12	1.44	1.59	2.22	2.54	2.85

Shaft bores (● = Round, ■ = Square; ❍ or ❑ = mold to order; * = not possible with S5 RG and G belts)

25	mm		● / ■*	●	● / ■	●	●	❍
30	mm		● / ■*	●	●	●	●	●
40	mm			■*	● / ■	❍ / ■	● / ■	❍ / ■
0.75	inch	●*						
1	inch		● / ❑*	●	● / ❑	●	❍	●
1.25	inch		❍ / ❑*	❍	●	●	❍	●
1.5	inch			■*	● / ■	● / ■	❍ / ■	● / ■

Material: PA, Color: LG

LG (Light gray)

All measurements and tolerances apply at 21 °C.
All imperial dimensions (inches) are rounded off.
For detailed sprocket and shaft dimensions see appendix 6.3
Number of sprockets (sprocket spacing distance) see chapter 3.2
Sprocket installation see chapter 5.2

S11 IDL | Idler

For side support and return roller without tooth engagement



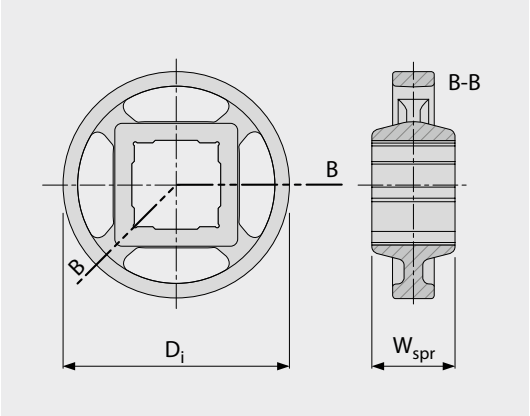

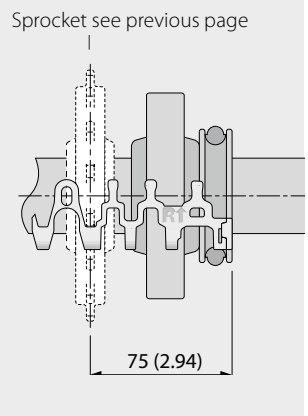

Main dimensions

Sprocket size (Number of teeth)		Z6	Z9	Z11	Z12	Z16	Z18	Z20
W_{spr}	mm	24.0	24.0	24.0	24.0	24.0	24.0	24.0
	inch	0.94	0.94	0.94	0.94	0.94	0.94	0.94
D_i	mm	31.7	56.1	72.2	80.3	112.3	128.2	144.1
	inch	1.25	2.21	2.84	3.16	4.42	5.05	5.67

Shaft bores (● = Round, ■ = Square; ❍ or ❑ = mold to order; * = not possible with S5 RG and G belts)

25	mm		● / ■*	●	● / ■	●	●	❍
30	mm		● / ■*	●	●	●	●	●
40	mm			■*	● / ■	❍ / ■	● / ■	❍ / ■
0.75	inch	●*						
1	inch		● / ❑*	●	● / ❑	●	❍	●
1.25	inch		❍ / ❑*	❍	●	●	❍	●
1.5	inch			■*	● / ■	● / ■	❍ / ■	● / ■

Material: PA, Color: LG

LG (Light gray)

All measurements and tolerances apply at 21 °C.
All imperial dimensions (inches) are rounded off.
For detailed shaft dimensions see appendix 6.3
Idler installation see chapter 5.2 (Sprocket installation)

S11-45 GRT PMC

Open version (45 %) base module for drainage



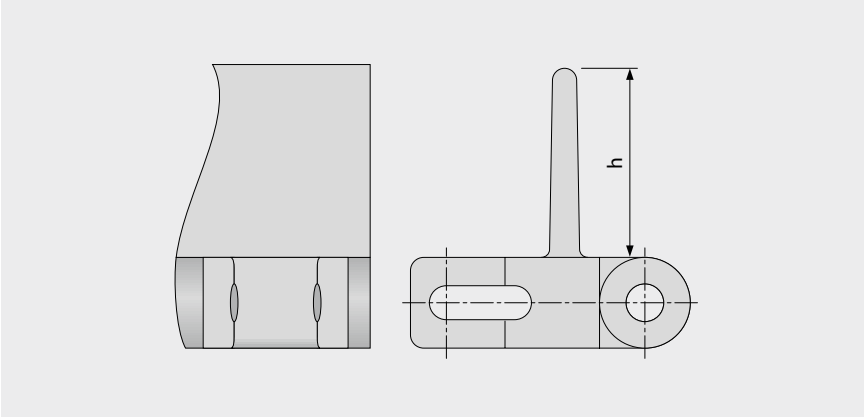

Basic data

Material	Color	Height (h)	
		25 mm 1 inch	50 mm 2 inch
PE	WT	●	●
POM	BL	●	●
POM	DB	mold to order	mold to order
POM	UC	mold to order	mold to order
POM	WT	●	●
PP	DB	mold to order	mold to order
PP	WT	●	●

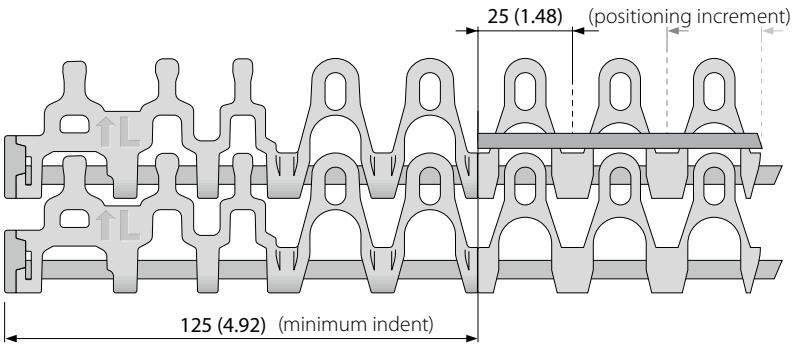

Molded width: 100 mm (3.9 in)

BL (Blue), DB (Dark blue), UC (Uncolored), WT (White)

All measurements and tolerances apply at 21 °C; for temperature deviations please see Prolink manual chapter 4.4 "Temperature influence".
All imperial dimensions (inches) are rounded off.
Note: Use of accessory in a belt may impact on the minimum design radii. Please see chapter 6.3 for further information.

SERIES 11 | **INSTALLATION NOTES**

Side flexing belt | Pitch 25 mm (0.98 in)

Preferred travel direction

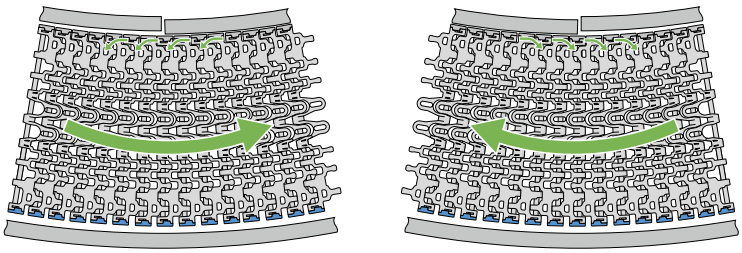

Curve conveyor

Curve direction S11-> CW (ClockWise) or CCW (Counter ClockWise)

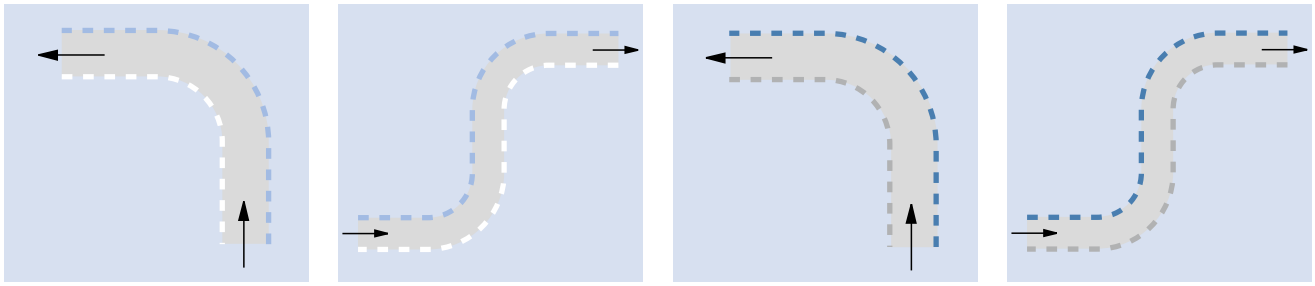

Curve direction S11/S5 ST Combo -> Belt CCW (Counter ClockWise)

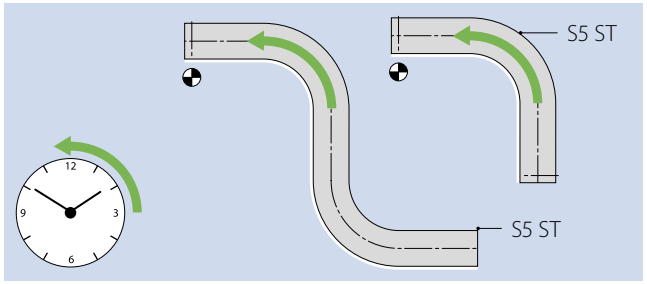

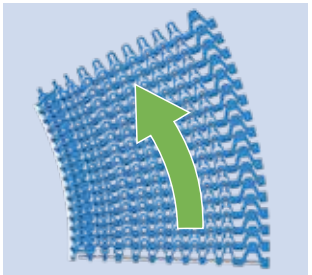

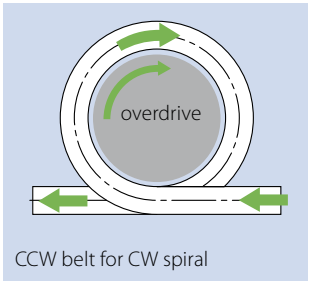

CCW belt for CW spiral

Sprocket installation

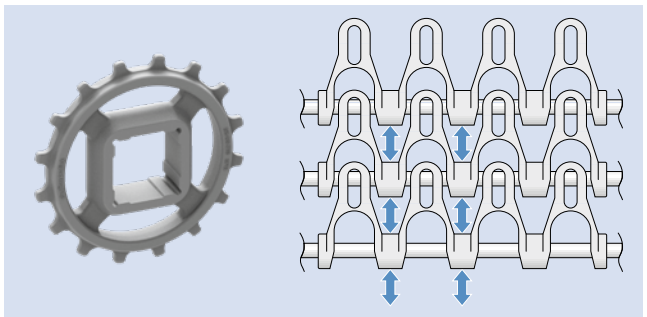

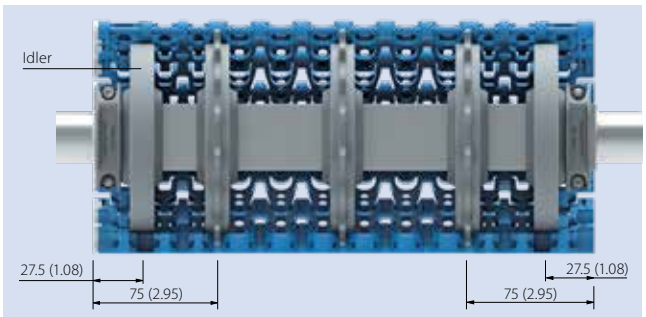



Further information in chapter 3 and 5

Forbo MOVEMENT SYSTEMS

LEGEND

① Series
S1 … S19

② Open area/Sprocket size
Percentage open area Format: xx E.g. 20 = 20 %
For sprockets: number of teeth Format: "Z"xx E.g. Z12 = 12 teeth

③ Surface pattern	
BSL	Base module for slider
CTP	Cone top
CUT	Curved top
FLT	Flat top (smooth)
FRT-OG	Friction top without High Grip insert
FRT(X)	Friction top (Design X)
GRT	Grid top
HDK	High Deck
LRB	Lateral rib
MOD	Modified module shape
NCL	No cling
NPY	Negative pyramid
NSK	Non skid
NSK2	Non skid, nonwoven variant
NTP	Nub top (round studs)
PRR	Pin Retained Rollers
RAT	Radius top
RRB	Raised rib
RSA	Reduced surface area
RTP	Roller top
SRS	Slip-resistant surface

④ Type	
BPU	Bucket profile
CAP	Pin lock & belt edge sealing
CCW	Counter clockwise
CLP	Clip
CM	Center module
CW	Clockwise
FPL	Finger plate
HDT	Hold Down Tab
IDL	Idler
INS	Insert
PIN	Coupling rod
PMC	Profile module center
PMU	Profile module universal
PSP	ProSnap
PSU-0	Prof. scoop uni. closed
PSU-X	Prof. scoop uni. x% open
RI	High Grip insert
REL	Reinforcement Link (SS)
ROL	Rollers
RTR	Retaining ring
SG	Module with sideguard
SGL	Side guard, left
SGR	Side guard, right
SLI	Slider
SMA	Side module, A side
SMB	Side module, B side
SML	Side module, left
SMR	Side module, right
SMT	Side module, tight radius
SMU	Side module, universal/both sides
SPR	Sprocket
SPR-SP	Split sprocket, 2-part
SSL	Self stacker side module, left
SSR	Self stacker side module, right
TPL	Turning panel, left
TPR	Turning panel, right
UM	Universal module
WSC	Wheel Stopper Center
WSS	Wheel Stopper Side

⑤ Style	
1.6	1.6 collapse factor
1.7	1.7 collapse factor
2.2	2.2 collapse factor
2.2 G	2.2 collapse factor, guided
A90	Angle 90° to conveying direction
BT	Bearing tab
DR	Double row sprocket
F1, F2, F3 …	Collapse factor modules
G	Guided
GT	Guiding tabs
HD	Hold Down
HR	Hard removable pin
Ixx	xx = indent in mm
RG	Reversed guided
SG	Side guard
SP	Split sprocket
ST	Strong
V2	Version 2 indicates a design update

⑥ Material	
PA	Polyamide
PA-FR	Polyamide flame retadant
PA-FRHC	Polyamide, flame retadant, high conductive
PA-HT	Polyamide high temperature
PBT	Polybutylenterephthalate
PE	Polyethylene
PE-I	PE impact resistant
PE-MD	PE metal detectable
PK	Wear & impact improved polymer
PLX	Special PK for pins with small diameter – higher stiffness
POM	Polyoxymethylene (Polyacetal)
POM-CR	POM cut resistant
POM-HC	POM highly conductive
POM-MD	POM metal detectable
POM-PE	POM side modules + PE center modules
POM-PP	POM side modules + PP center modules
PP	Polypropylene
PP-MD	PP metal detectable
PP-SW	PP steam and hot water resistant
PXX-HC	Self-extinguishing highly conductive material
R1	TPE 80 Shore A, PP
R2	EPDM 80 Shore A, vulcanized
R3	TPE 70 Shore A, POM
R4	TPE 86 Shore A, PP
R5	TPE 52 Shore A, PP
R6	TPE 63 Shore A, POM
R7	TPE 50 Shore A, PP
R8	TPE 55 Shore A, PE
R11	TPE 50 Shore A, POM
SER	Self-extinguishing TPE
SS	Stainless steel
SSS	Stainless steel acid resistant
TPC1	Themoplastic Copolyester
-HA	Supports the HACCP concept
HW	High Wear resistant material

⑦ Color*	
AT	Anthracite
BG	Beige
BK	Black
BL	Blue
DB	Dark blue
GN	Green
LB	Light blue
LG	Light gray
OR	Orange
RE	Red
TQ	Turquoise
UC	Uncolored
WT	White
YL	Yellow

⑧ Height/Diameter/ Bore size and style
Height in mm (in) Format: Hxxx Pin diameter in mm (in) Format: Dxxx
Bore size: SQ (= square) or RD (= round) either in mm or inches Format: SQxxMM or RDxxIN

⑨ Length/Width
Pins Length in mm (in) Format: Lxxx Module width in mm (in) Format: Wxxx REL in mm one decimal Format: Wx.x

* For each series' standard colors please refer to the table of materials for each belt (chapter 1.2). A number of other colors are available on request. Colors can vary from the original due to the print, production processes or material used.