EXCERPT FROM PROLINK ENGINEERING MANUAL

05/26 (Ref-No. 888)

siegling prolink
modular belts

SERIES 8

Straight running belts
Pitch 25.4 mm (1 in)

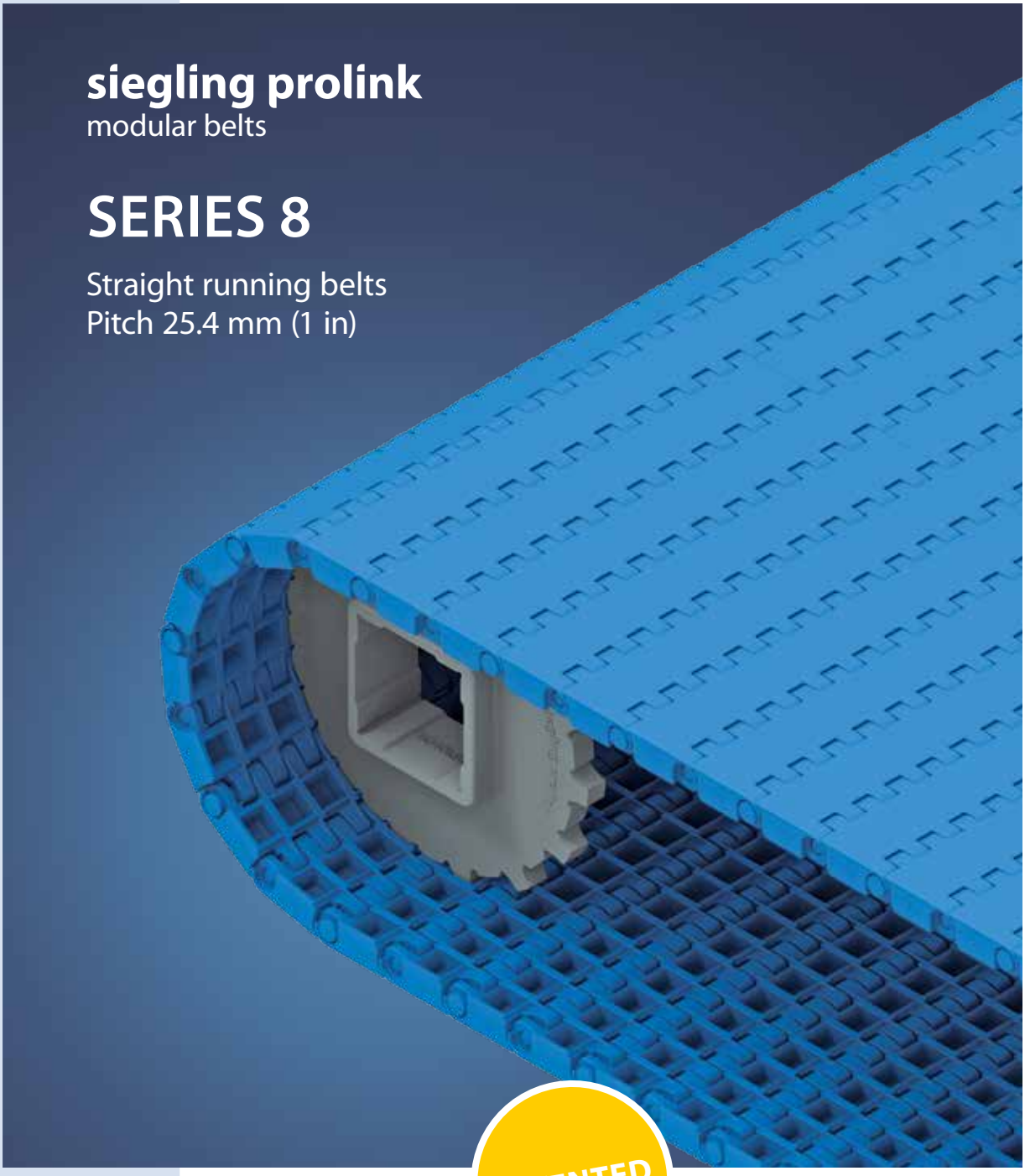

PATENTED

Forbo Siegling GmbH
Lilienthalstraße 6/8, D-30179 Hannover
Telefon +49 511 6704 0
www.forbo-siegling.com, siegling@forbo.com

Ref. no. 888-1_1.2_S8

SERIES 8 | **OVERVIEW**

Straight running belts | Pitch 25.4 mm (1 in)

siegling prolink
modular belts

Belts for medium to heavy-duty applications

Side view scale 1:1

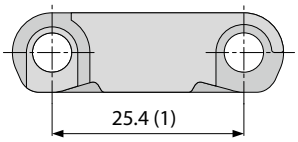

Design characteristics

- Closed hinge design provides high belt pull capacity
- Rigid module design makes belt suitable for long conveyors
- Exceptionally robust and durable module and sprocket design
- Closed solid edge design
- Flame retardant version available (PXX-HC – in line with DIN EN 13501-1)

Basic data

Pitch	25.4 mm (1 in)
Belt width min.	38.1 mm (1.5 in)
Width increments	12.7 mm (0.5 in)
Hinge pins	5 mm (0.2 in) made of plastic (PBT, PP, PA-HT). One-piece up to a belt width of 1200 mm (47 in).

Available surface pattern and opening area

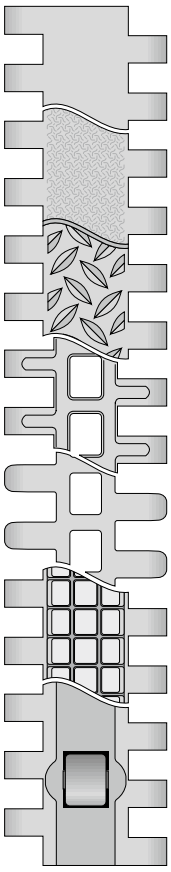

S8.1-0 FLT
Closed, smooth surface

S8.1-0 SRS
Closed, slip-resistant surface

S8.1-0 NSK/S8.1-0 NSK2
Closed surface with non skid pattern

S8.1-25 RAT
Open (25 %) surface with rounded contact surfaces

S8.1-30 FLT
Open (30 %) flat top surface with rounded hinges

S8-0 FRT1
Closed surface with friction top

S8-0 RTP A90
Closed surface with roller top

Sprockets
in different sizes with round or square bore, one part and split



Profiles
in different heights and designs for inclines

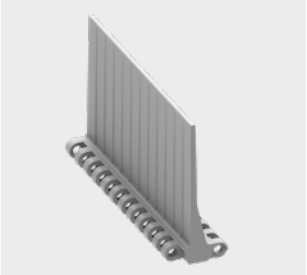

Side guards
in different heights for retention of bulk products



Hold Down Tabs
Hold Down Tabs for additional guiding

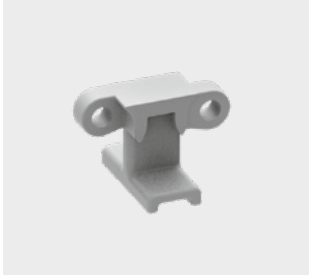

SERIES 8 | **BELT TYPES**

siegling prolink
modular belts

Straight running belt | Pitch 25.4 mm (1 in)

S8.1-0 FLT | 0 % Opening | Flat top

Closed, smooth surface | Flat top surface

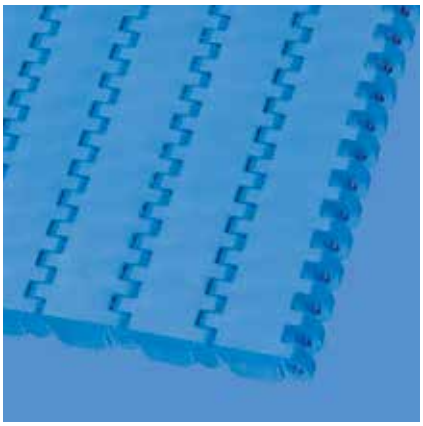

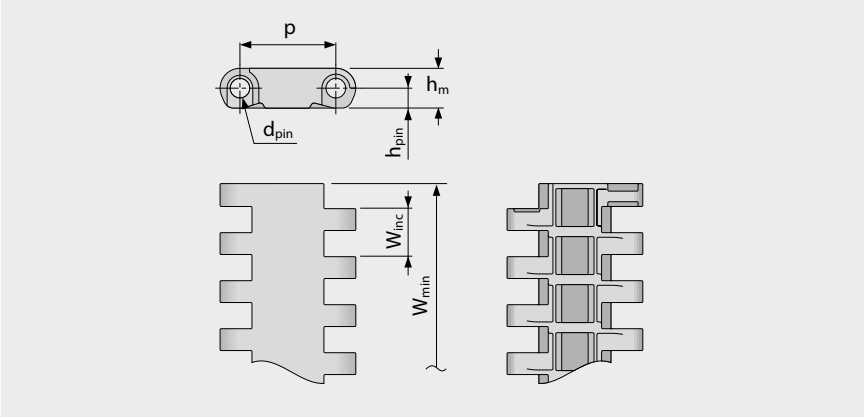

Belt dimensions

	p	d_{pin}	h_m	h_{pin}	h_s	W_{min}	W_{inc}	W_{tol}	Minimum flex radii[1]				
	Pitch	Pin Ø	Thickness	Pin position	Height	Width min.	Width Increment	Width tolerance [%]	r1 C_c x W_B	r2	r3	r4	r5
mm	25.4	5.0	10.5	5.3	0.0	38.1	12.7	±0.2	–	25.4	50.8	76.2	25.4
inch	1.0	0.2	0.41	0.21	0.0	1.5	0.5	±0.2	–	1.0	2.0	3.0	1.0

Available standard materials [3]

Belt		Pin		Nominal belt pull, straight		Weight		Width deviation	Temperature		Certificates[2]		
Material	Color	Material	Color	[N/mm]	[lb/ft]	[kg/m²]	[lb/ft²]	[%]	[°C]	[°F]	FDA	EU	MHLW
PA-HT	BK	PA-HT	BK	30	2056	10.7	2.19	1.49	-30/155	-22/311	–	–	
POM	BL	PBT	BL	40	2741	11.0	2.25	-0.31	-45/90	-49/194	●	●	●
POM	LG	PBT	UC	40	2741	11.0	2.25	-0.31	-45/90	-49/194	●	●	●
POM	WT	PBT	UC	40	2741	11.0	2.25	-0.31	-45/90	-49/194	●	●	●
POM-CR	AT	PBT	UC	40	2741	11.0	2.25	-0.31	-45/90	-49/194			
PP	WT	PP	WT	20	1370	7.1	1.45	0.0	5/100	41/212	●	●	●
PP	LG	PP	WT	20	1370	7.1	1.45	0.0	5/100	41/212	●	●	●
PP	BL	PP	BL	20	1370	7.1	1.45	0.0	5/100	41/212	●	●	●
Mold to order belts													
PXX-HC	BK	PBT	BL	20	1370	7.9	1.62	0.0	5/100	41/212	–	–	

Mold to width available in: 51 mm (2.0 in), 76 mm (3.0 in), 152 mm (6.0 in), 229 mm (9.0 in)

AT (Anthracite), BK (Black), BL (Blue), LG (Light gray), UC (Uncolored), WT (White)

All measurements and tolerances apply at 21 °C; for temperature deviations please see Prolink manual chapter 4.4 "Temperature influence".
All imperial dimensions (inches) are rounded off.

[1] Flex radii: r1 = side flex, r2 = front flex on roller, r3 = back flex on load bearing roller, r4 = back flex on Hold Down shoe, r5 = back flex on roller

[2] Complies with FDA 21 CFR | Complies with (EU) 10/2011 and (EC) 1935/2004 regulations regarding the raw materials used and the migration thresholds | Complies with Japanese MHLW Notification 370
● = available | – = not available | empty cells = not tested

[3] More materials and colors on request

Forbo
MOVEMENT SYSTEMS

SERIES 8 | **BELT TYPES**

siegling prolink
modular belts

Straight running belt | Pitch 25.4 mm (1 in)

S8.1-0 SRS | 0 % Opening | Slip-resistant surface

Closed surface | Slip-resistant surface, pleasant to walk and kneel on

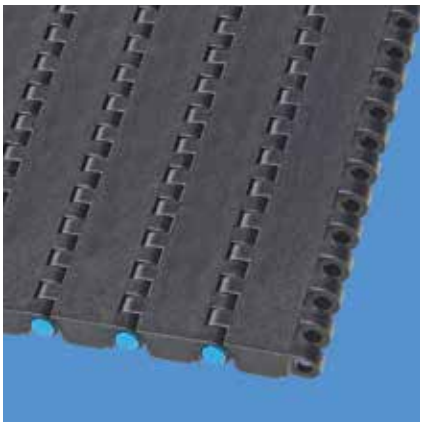

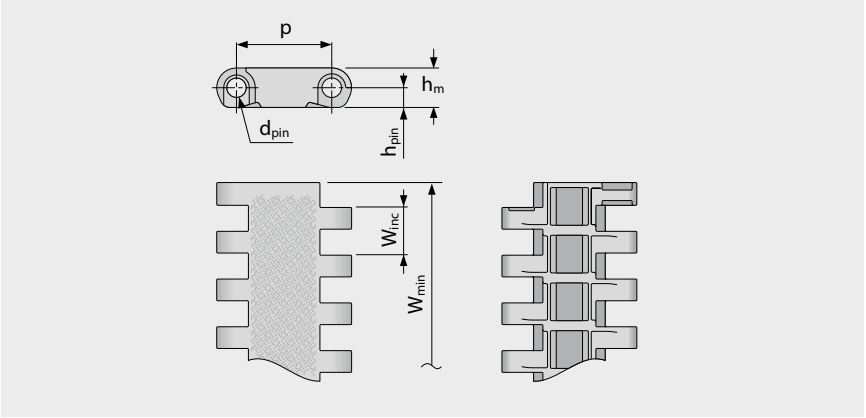

Belt dimensions

	p	d_{pin}	h_m	h_{pin}	h_s	W_{min}	W_{inc}	W_{tol}	Minimum flex radii[1]				
	Pitch	Pin Ø	Thickness	Pin position	Height	Width min.	Width Increment	Width tolerance [%]	r1 C_c x W_B	r2	r3	r4	r5
mm	25.4	5.0	10.5	5.3	0.0	38.1	12.7	±0.2	–	25.4	50.8	76.2	25.4
inch	1.0	0.2	0.41	0.21	0.0	1.5	0.5	±0.2	–	1.0	2.0	3.0	1.0

Available standard materials [3]

Belt		Pin		Nominal belt pull, straight		Weight		Width deviation	Temperature		Certificates[2]
Material	Color	Material	Color	[N/mm]	[lb/ft]	[kg/m²]	[lb/ft²]	[%]	[°C]	[°F]	Flame retardant
POM-CR	AT	PBT	BL	40	2741	11.0	2.25	-0.31	-45/90	-49/194	–
POM-HC	AT	PBT	BL	40	2741	11.0	2.25	-0.31	-45/90	-49/194	–
PP	LG	PP	WT	20	1370	7.1	1.45	0.0	5/100	41/212	
PXX-HC	BK	PBT	BL	20	1370	7.9	1.62	0.0	5/100	41/212	●

Mold to width available in: 51 mm (2.0 in), 76 mm (3.0 in), 152 mm (6.0 in), 229 mm (9.0 in)

AT (Anthracite), BK (Black), BL (Blue), LG (Light gray), WT (White)

All measurements and tolerances apply at 21 °C; for temperature deviations please see Prolink manual chapter 4.4 "Temperature influence".
All imperial dimensions (inches) are rounded off.

[1] Flex radii: r1 = side flex, r2 = front flex on roller, r3 = back flex on load bearing roller, r4 = back flex on Hold Down shoe, r5 = back flex on roller

[2] Complies with DIN EN 13501-1 Cfl-s1 (and DIN 4102 B1)

● = available | – = not available | empty cells = not tested

[3] More materials and colors on request

forbo
MOVEMENT SYSTEMS

SERIES 8 | **BELT TYPES**

siegling prolink
modular belts

Straight running belt | Pitch 25.4 mm (1 in)

S8.1-0 NSK | 0 % Opening | Non skid

Closed surface | Non skid surface for increased safety when walking on belt | Flat top sections across the belt width for supporting the belt on the return

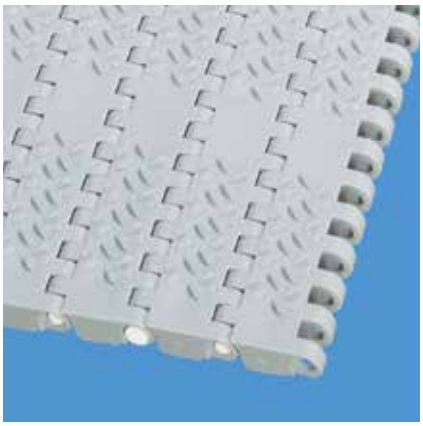

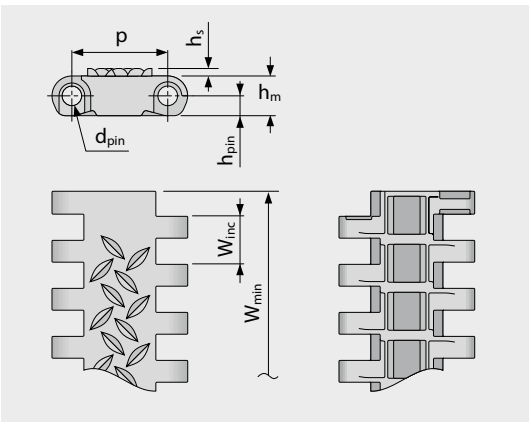

Variant specific dimensions [mm (in)]

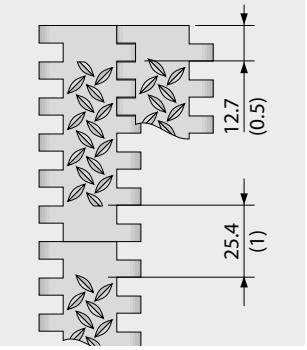

Belt dimensions

	p	d_{pin}	h_m	h_{pin}	h_s	W_{min}	W_{inc}	W_{tol}	Minimum flex radii[1]				
	Pitch	Pin Ø	Thickness	Pin position	Height	Width min.	Width Increment	Width tolerance [%]	r1 C_c x W_B	r2	r3	r4	r5
mm	25.4	5.0	10.5	5.3	2.0	38.1	12.7	±0.2	–	25.4	50.8	76.2	25.4
inch	1.0	0.2	0.41	0.21	0.08	1.5	0.5	±0.2	–	1.0	2.0	3.0	1.0

Available standard materials [3]

Belt		Pin		Nominal belt pull, straight		Weight		Width deviation	Temperature		Certificates[2]		
Material	Color	Material	Color	[N/mm]	[lb/ft]	[kg/m²]	[lb/ft²]	[%]	[°C]	[°F]	FDA	EU	MHLW
POM	BL	PBT	BL	40	2741	11.0	2.25	-0.31	-45/90	-49/194	●	●	●
PP	LG	PP	WT	20	1370	7.1	1.45	0.0	5/100	41/212	●	●	●
Mold to order belts													
PXX-HC	BK	PBT	BL	20	1370	7.9	1.62	0.0	5/100	41/212	–	–	

Mold to width available in: 229 mm (9.0 in)

■ BK (Black), ■ BL (Blue), ■ LG (Light gray), □ WT (White)

All measurements and tolerances apply at 21 °C; for temperature deviations please see Prolink manual chapter 4.4 "Temperature influence".
All imperial dimensions (inches) are rounded off.

[1] Flex radii: r1 = side flex, r2 = front flex on roller, r3 = back flex on load bearing roller, r4 = back flex on Hold Down shoe, r5 = back flex on roller

[2] Complies with FDA 21 CFR | Complies with (EU) 10/2011 and (EC) 1935/2004 regulations regarding the raw materials used and the migration thresholds | Complies with Japanese MHLW Notification 370
● = available | – = not available | empty cells = not tested

[3] More materials and colors on request

Forbo
MOVEMENT SYSTEMS

SERIES 8 | **BELT TYPES**

siegling prolink
modular belts

Straight running belt | Pitch 25.4 mm (1 in)

S8.1-0 NSK2 | 0 % Opening | Non skid (Design 2)

Closed surface | Non skid surface for increased safety when walking on belt | Uninterrupted NSK-structure across the full belt width

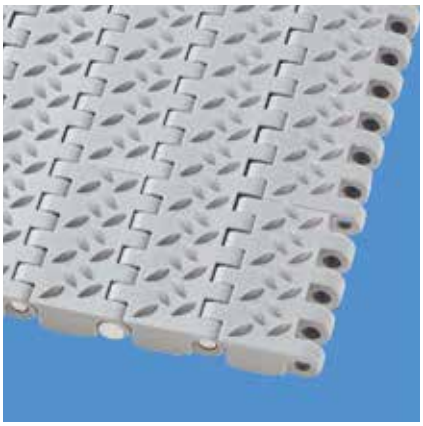

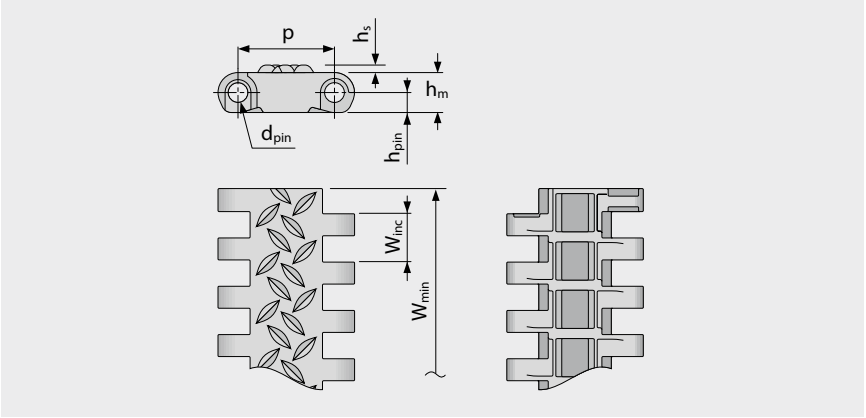

Belt dimensions

	p	d_{pin}	h_m	h_{pin}	h_s	W_{min}	W_{inc}	W_{tol}	Minimum flex radii[1]				
	Pitch	Pin Ø	Thickness	Pin position	Height	Width min.	Width Increment	Width tolerance [%]	r1 C_c x W_B	r2	r3	r4	r5
mm	25.4	5.0	10.5	5.3	2.0	38.1	12.7	±0.2	–	25.4	50.8	76.2	25.4
inch	1.0	0.2	0.41	0.21	0.08	1.5	0.5	±0.2	–	1.0	2.0	3.0	1.0

Available standard materials [3]

Belt		Pin		Nominal belt pull, straight		Weight		Width deviation	Temperature		Certificates[2]		
Material	Color	Material	Color	[N/mm]	[lb/ft]	[kg/m²]	[lb/ft²]	[%]	[°C]	[°F]	FDA	EU	MHLW
PP	LG	PP	WT	20	1370	7.1	1.45	0.0	5/100	41/212	●	●	●

Mold to width available in: 229 mm (9.0 in)

LG (Light gray), WT (White)

All measurements and tolerances apply at 21 °C; for temperature deviations please see Prolink manual chapter 4.4 "Temperature influence".
All imperial dimensions (inches) are rounded off.

[1] Flex radii: r1 = side flex, r2 = front flex on roller, r3 = back flex on load bearing roller, r4 = back flex on Hold Down shoe, r5 = back flex on roller

[2] Complies with FDA 21 CFR | Complies with (EU) 10/2011 and (EC) 1935/2004 regulations regarding the raw materials used and the migration thresholds | Complies with Japanese MHLW Notification 370

● = available | – = not available | empty cells = not tested

[3] More materials and colors on request

Forbo
MOVEMENT SYSTEMS

SERIES 8 | **BELT TYPES**

siegling prolink
modular belts

Straight running belt | Pitch 25.4 mm (1 in)

S8.1-25 RAT | 25 % Opening | Radius top

Open area (25 %) with rounded contact surfaces | 24 % contact area (Largest opening: 9.7 x 7 mm/0.38 x 0.28 in) | Radius top belt surface ensures minimum product contact and good release characteristics



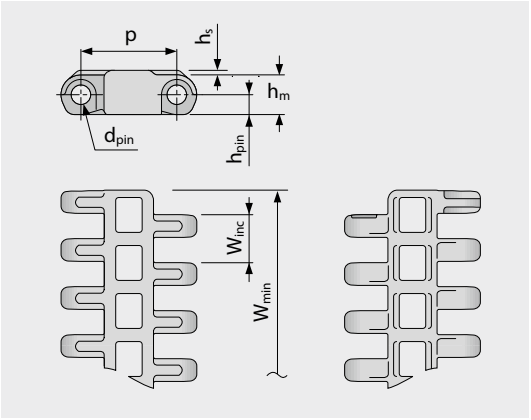

Variant specific dimensions [mm (in)]

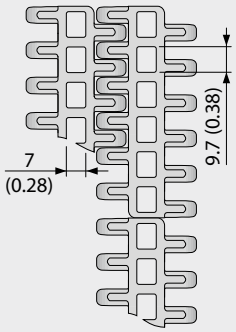

Belt dimensions

	p	d_{pin}	h_m	h_{pin}	h_s	W_{min}	W_{inc}	W_{tol}	Minimum flex radii[1]				
	Pitch	Pin Ø	Thickness	Pin position	Height	Width min.	Width Increment	Width tolerance [%]	r1 C_c x W_B	r2	r3	r4	r5
mm	25.4	5.0	10.5	5.3	1.2	38.1	12.7	±0.2	–	25.4	50.8	76.2	25.4
inch	1.0	0.2	0.41	0.21	0.05	1.5	0.5	±0.2	–	1.0	2.0	3.0	1.0

Available standard materials [3]

Belt		Pin		Nominal belt pull, straight		Weight		Width deviation	Temperature		Certificates[2]		
Material	Color	Material	Color	[N/mm]	[lb/ft]	[kg/m²]	[lb/ft²]	[%]	[°C]	[°F]	FDA	EU	MHLW
PA-HT	BK	PA-HT	BK	30	2056	9.8	2.01	1.53	-30/155	-22/311	–	–	
POM	BL	PBT	BL	40	2741	9.7	1.99	-0.61	-45/90	-49/194	●	●	●
PP	LG	PP	WT	20	1370	6.4	1.31	0.0	5/100	41/212	●	●	●
PP	BL	PP	BL	20	1370	6.4	1.31	0.0	5/100	41/212	●	●	●
Mold to order belts													
PE		PE		15	1028	6.7	1.37	-0.31	-70/65	-94/149			

Mold to width available in: 76 mm (3.0 in), 152 mm (6.0 in), 229 mm (9.0 in)

■ BK (Black), ■ BL (Blue), ■ LG (Light gray), □ WT (White)

All measurements and tolerances apply at 21 °C; for temperature deviations please see Prolink manual chapter 4.4 "Temperature influence".
All imperial dimensions (inches) are rounded off.

[1] Flex radii: r1 = side flex, r2 = front flex on roller, r3 = back flex on load bearing roller, r4 = back flex on Hold Down shoe, r5 = back flex on roller

[2] Complies with FDA 21 CFR | Complies with (EU) 10/2011 and (EC) 1935/2004 regulations regarding the raw materials used and the migration thresholds | Complies with Japanese MHLW Notification 370
● = available | – = not available | empty cells = not tested

[3] More materials and colors on request

Forbo
MOVEMENT SYSTEMS

SERIES 8 | **BELT TYPES**

siegling prolink
modular belts

Straight running belt | Pitch 25.4 mm (1 in)

S8.1-30 FLT | 30 % Opening | Flat top

Open version (30 %) | Flat top surface | 53 % contact area (Largest opening: 9.7 x 7 mm/0.38 x 0.28 in) | Smooth surface

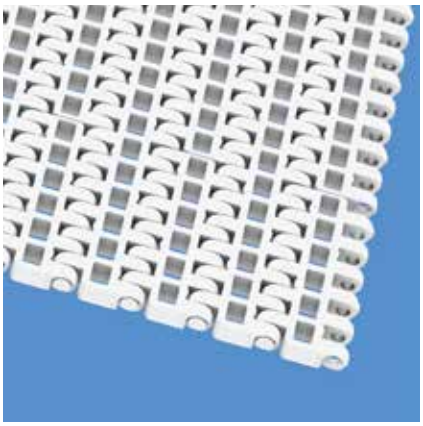

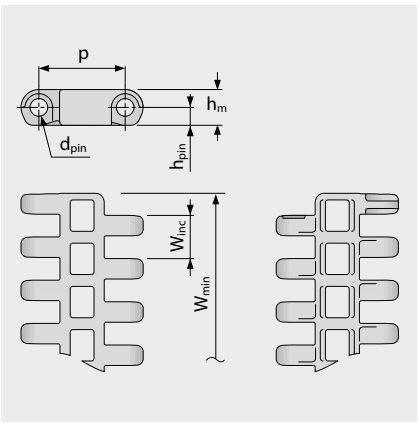

Variant specific dimensions [mm (in)]

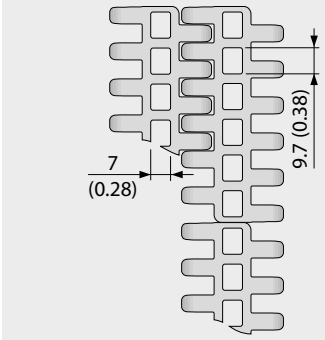

Belt dimensions

	p	d_{pin}	h_m	h_{pin}	h_s	W_{min}	W_{inc}	W_{tol}	Minimum flex radii[1]				
	Pitch	Pin Ø	Thickness	Pin position	Height	Width min.	Width Increment	Width tolerance [%]	r1 C_c x W_B	r2	r3	r4	r5
mm	25.4	5.0	10.5	5.3	0.0	76.2	12.7	±0.2	–	25.4	50.8	76.2	25.4
inch	1.0	0.2	0.41	0.21	0.0	3.0	0.5	±0.2	–	1.0	2.0	3.0	1.0

Available standard materials [3]

Belt		Pin		Nominal belt pull, straight		Weight		Width deviation	Temperature		Certificates[2]		
Material	Color	Material	Color	[N/mm]	[lb/ft]	[kg/m²]	[lb/ft²]	[%]	[°C]	[°F]	FDA	EU	MHLW
POM	BL	PBT	BL	40	2741	9.0	1.84	-0.58	-45/90	-49/194	●	●	●
PP	BL	PP	BL	20	1370	5.8	1.19	0.0	5/100	41/212	●	●	●
PP	WT	PP	WT	20	1370	5.8	1.19	0.0	5/100	41/212	●	●	●
Mold to order belts													
PE	BL	PE	UC	15	1028	6.1	1.25	-0.31	-70/65	-94/149	●	●	●

Mold to width available in: 76 mm (3.0 in), 191 mm (7.5 in)

BL (Blue), UC (Uncolored), WT (White)

All measurements and tolerances apply at 21 °C; for temperature deviations please see Prolink manual chapter 4.4 "Temperature influence".
All imperial dimensions (inches) are rounded off.

[1] Flex radii: r1 = side flex, r2 = front flex on roller, r3 = back flex on load bearing roller, r4 = back flex on Hold Down shoe, r5 = back flex on roller

[2] Complies with FDA 21 CFR | Complies with (EU) 10/2011 and (EC) 1935/2004 regulations regarding the raw materials used and the migration thresholds | Complies with Japanese MHLW Notification 370

● = available | – = not available | empty cells = not tested

[3] More materials and colors on request

Forbo
MOVEMENT SYSTEMS

SERIES 8 | **BELT TYPES**

siegling prolink
modular belts

Straight running belt | Pitch 25.4 mm (1 in)

S8-0 FRT1 | 0 % Opening | Friction top (Design 1)

Closed surface | Friction top with cube-shaped High Grip pads | Grooves inbetween to improve flexibility and to channel dirt away from the friction surface

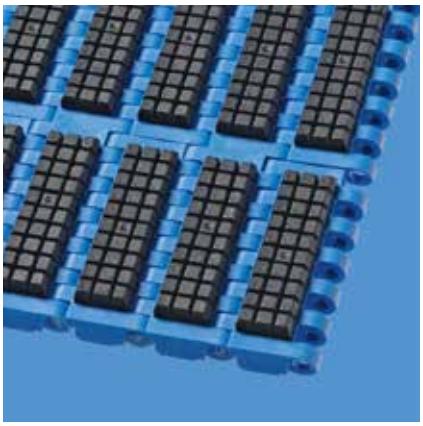

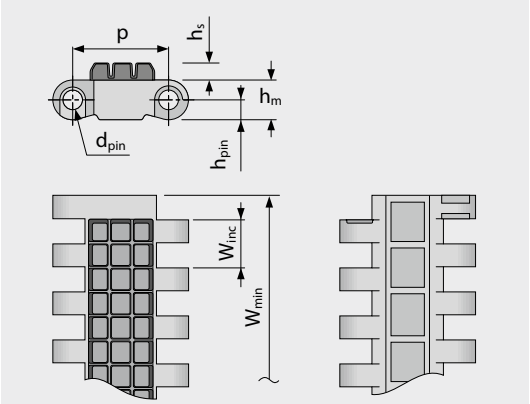

Variant specific dimensions [mm (in)]

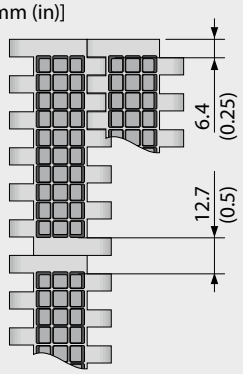

Belt dimensions

	p	d_{pin}	h_m	h_{pin}	h_s	W_{min}	W_{inc}	W_{tol}	Minimum flex radii[1]				
	Pitch	Pin Ø	Thickness	Pin position	Height	Width min.	Width Increment	Width tolerance [%]	r1 C_c x W_B	r2	r3	r4	r5
mm	25.4	5.0	10.5	5.3	4.5	76.2	76.2	±0.2	–	25.4	50.8	76.2	25.4
inch	1.0	0.2	0.41	0.21	0.18	3.0	3.0	±0.2	–	1.0	2.0	3.0	1.0

Available standard materials [3]

Belt		Pin		Rubber		Nominal belt pull, straight		Weight		Width deviation	Temperature		Certificates[2]		
Material	Color	Material	Color	Material	color	[N/mm]	[lb/ft]	[kg/m²]	[lb/ft²]	[%]	[°C]	[°F]	FDA	EU	MHLW
POM	BL	PBT	BL	R6	BK	40	2741	17.7	3.63	-0.31	-45/60	-49/140	–	–	
POM	AT	PBT	BL	R6	BK	40	2741	17.7	3.63	-0.31	-45/60	-49/140	–	–	
PP	LG	PP	WT	R7	BK	20	1370	12.6	2.58	0.0	5/100	41/212	●	●	
PP	BL	PP	BL	R4	BG	20	1370	12.6	2.58	0.0	5/100	41/212			
Mold to order belts															
PP	BL	PP	BL	R7	BG	20	1370	12.6	2.58	0.0	5/100	41/212	●	●	

Mold to width available in: 229 mm (9.0 in)

AT (Anthracite), BG (Beige), BK (Black), BL (Blue), LG (Light gray), WT (White)

All measurements and tolerances apply at 21 °C; for temperature deviations please see Prolink manual chapter 4.4 "Temperature influence".
All imperial dimensions (inches) are rounded off.

[1] Flex radii: r1 = side flex, r2 = front flex on roller, r3 = back flex on load bearing roller, r4 = back flex on Hold Down shoe, r5 = back flex on roller

[2] Complies with FDA 21 CFR | Complies with (EU) 10/2011 and (EC) 1935/2004 regulations regarding the raw materials used and the migration thresholds | Complies with Japanese MHLW Notification 370
● = available | – = not available | empty cells = not tested

[3] More materials and colors on request

Forbo
MOVEMENT SYSTEMS

SERIES 8 | **BELT TYPES**

siegling prolink
modular belts

Straight running belt | Pitch 25.4 mm (1 in)

S8-0 RTP A90 | 0 % Opening | Roller top · A90

Closed surface with roller top at 90° to the direction of travel | version for low-friction merging of products lateral

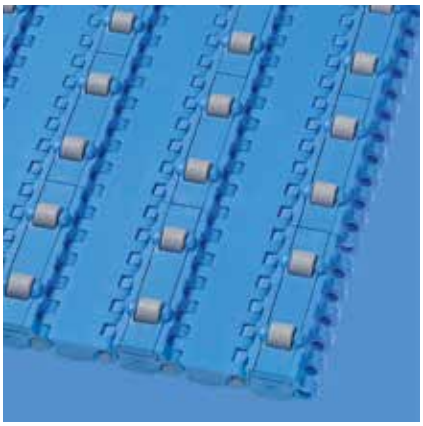

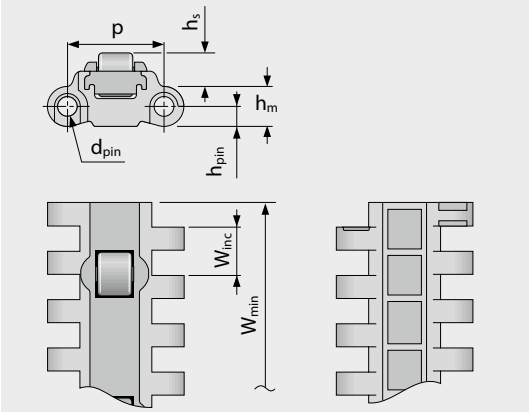

Variant specific dimensions
[mm (in)]

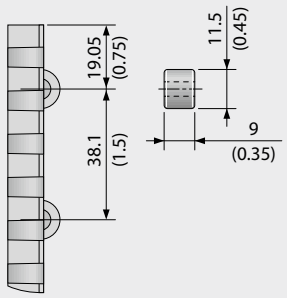

Belt dimensions

	p	d_{pin}	h_m	h_{pin}	h_s	W_{min}	W_{inc}	W_{tol}	Minimum flex radii[1]				
	Pitch	Pin Ø	Thickness	Pin position	Height	Width min.	Width Increment	Width tolerance [%]	r1 C_c x W_B	r2	r3	r4	r5
mm	25.4	5.0	10.5	5.3	8.8	228.6	76.2	±0.2	–	25.4	50.8	76.2	25.4
inch	1.0	0.2	0.41	0.21	0.35	9.0	3.0	±0.2	–	1.0	2.0	3.0	1.0

Available standard materials [3]

Belt		Pin		Nominal belt pull, straight		Weight		Width deviation	Temperature		Certificates[2]		
Material	Color	Material	Color	[N/mm]	[lb/ft]	[kg/m²]	[lb/ft²]	[%]	[°C]	[°F]	FDA	EU	MHLW
POM	BL	PBT	BL	20	1370	14.3	2.93	-0.31	-45/90	-49/194	●	●	●

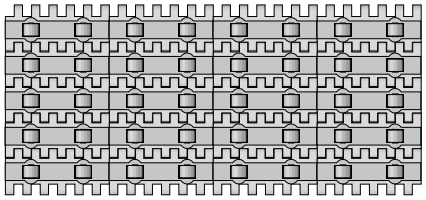

Standard configuration

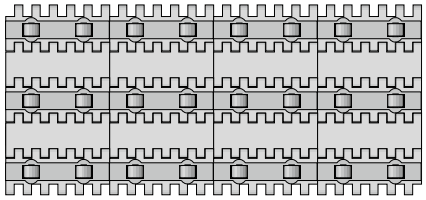

Configuration 1

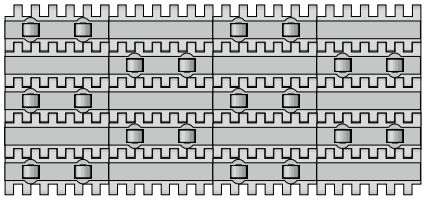

Configuration 2

BL (Blue)

All measurements and tolerances apply at 21 °C; for temperature deviations please see Prolink manual chapter 4.4 "Temperature influence".
All imperial dimensions (inches) are rounded off.

[1] Flex radii: r1 = side flex, r2 = front flex on roller, r3 = back flex on load bearing roller, r4 = back flex on Hold Down shoe, r5 = back flex on roller

[2] Complies with FDA 21 CFR | Complies with (EU) 10/2011 and (EC) 1935/2004 regulations regarding the raw materials used and the migration thresholds | Complies with Japanese MHLW Notification 370

● = available | – = not available | empty cells = not tested

[3] More materials and colors on request

Forbo
MOVEMENT SYSTEMS

SERIES 8 | **BELT TYPES**

siegling prolink
modular belts

Straight running belt | Pitch 25.4 mm (1 in)

S8.1-30 FLT GT | 30 % Opening | Flat top · Guiding Tabs

Open version (30 %) | Flat top surface | 53 % contact area (Largest opening: 9.7 x 7 mm/0.38 x 0.28 in) | Smooth surface | with guiding tabs for tracking of chain on long hygiene critical conveyors

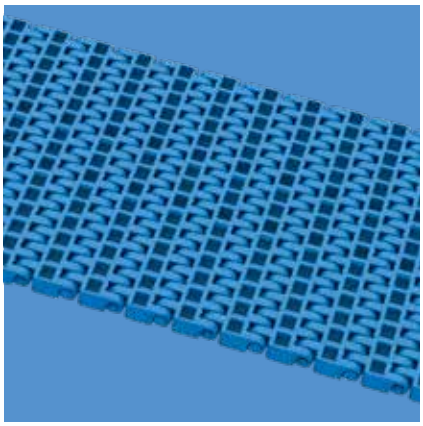

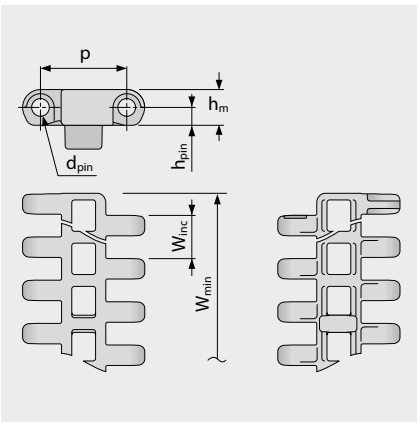

Variant specific dimensions [mm (in)]

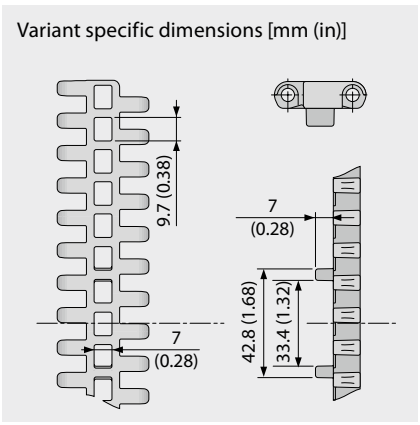

Belt dimensions

	p	d_{pin}	h_m	h_{pin}	h_s	W_{min}	W_{inc}	W_{tol}	Minimum flex radii[1]			
	Pitch	Pin Ø	Thickness	Pin position	Height	Width min.	Width Increment	Width tolerance [%]	r1 C_c x W_B	r2	r3	r4	r5
mm	25.4	5.0	10.5	5.3	0.0	191.0	0.0	±0.2	–	25.4	50.8	76.2	25.4
inch	1.0	0.2	0.41	0.21	0.0	7.52	0.0	±0.2	–	1.0	2.0	3.0	1.0

Available standard materials [3]

Belt		Pin		Nominal belt pull, straight		Weight		Width deviation	Temperature		Certificates[2]		
Material	Color	Material	Color	[N/mm]	[lb/ft]	[kg/m²]	[lb/ft²]	[%]	[°C]	[°F]	FDA	EU	MHLW
POM	BL	PBT	BL	40	2741	9.1	1.86	-0.58	-45/90	-49/194	●	●	●
Mold to order belts													
PE	BL	PE	UC	15	1028	6.1	1.25	-0.31	-70/65	-94/149	●	●	●
PP	BL	PP	BL	20	1370	5.9	1.21	0.0	5/100	41/212	●	●	●
PP	WT	PP	WT	20	1370	5.9	1.21	0.0	5/100	41/212	●	●	●

Mold to width available in: 191 mm (7.5 in)



Standard belt configuration (bottom side)
GT on every row

■ BL (Blue), □ UC (Uncolored), □ WT (White)

All measurements and tolerances apply at 21 °C; for temperature deviations please see Prolink manual chapter 4.4 "Temperature influence".
All imperial dimensions (inches) are rounded off.

[1] Flex radii: r1 = side flex, r2 = front flex on roller, r3 = back flex on load bearing roller, r4 = back flex on Hold Down shoe, r5 = back flex on roller

[2] Complies with FDA 21 CFR | Complies with (EU) 10/2011 and (EC) 1935/2004 regulations regarding the raw materials used and the migration thresholds | Complies with Japanese MHLW Notification 370

● = available | – = not available | empty cells = not tested

[3] More materials and colors on request

Forbo
MOVEMENT SYSTEMS

S8 SPR | Sprockets

Deep tooth engagement for heavy loads

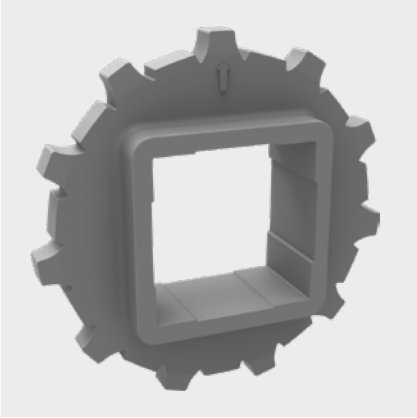

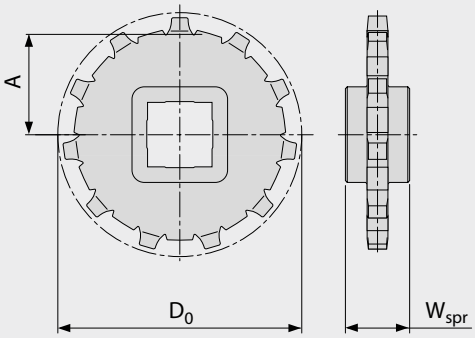

Main dimensions

Sprocket size (Number of teeth)		Z11	Z12	Z15	Z18	Z19	Z22
W_{spr}	mm	25.0	25.0	25.0	25.0	25.0	25.0
	inch	0.98	0.98	0.98	0.98	0.98	0.98
D_0	mm	90.2	99.5	122.7	148.5	155.7	181.2
	inch	3.55	3.92	4.83	5.85	6.13	7.13
A_{max}	mm	39.9	44.5	56.1	69.0	72.6	85.4
	inch	1.57	1.75	2.21	2.72	2.86	3.36
A_{min}	mm	38.3	43.0	54.9	68.0	71.6	84.5
	inch	1.51	1.69	2.16	2.68	2.82	3.33

Shaft bores (● = Round, ■ = Square; ❍ or ❑ = mold to order)

30	mm	●	●	●	●		
40	mm	■	■	● / ■	■	■	
60	mm			■		■	
50	mm						■
80	mm					■	
1	inch		●			●	
1.25	inch		●			●	
1.5	inch	❍ / ■	■	■		■	
2	inch				●		
2.5	inch					■	

Material: PA, Color: LG

LG (Light gray)

All measurements and tolerances apply at 21 °C.
All imperial dimensions (inches) are rounded off.
For detailed sprocket and shaft dimensions see appendix 6.3
Number of sprockets (sprocket spacing distance) see chapter 3.2

SERIES 8 | **SPLIT SPROCKETS**

siegling prolink
modular belts

Straight running belt | Pitch 25.4 mm (1 in)

S8 SPR-SP | Split Sprockets

Easy assembly without dismounting shaft | Deep tooth engagement for heavy loads



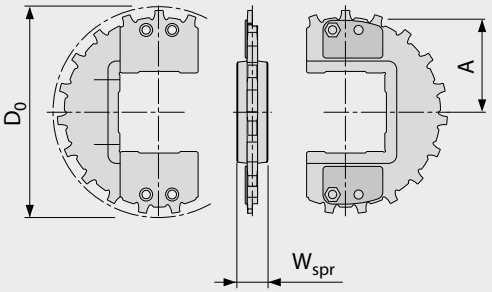

Main dimensions

Sprocket size (Number of teeth)		Z12	Z16	Z19	Z21	Z22
W_{spr}	mm	25.0	25.0	25.0	25.0	25.0
	inch	0.98	0.98	0.98	0.98	0.98
D_0	mm	99.5	132.2	155.7	172.9	181.2
	inch	3.92	5.20	6.13	6.81	7.13
A_{max}	mm	44.5	60.8	72.6	81.3	85.4
	inch	1.75	2.39	2.86	3.20	3.36
A_{min}	mm	43.0	59.7	71.6	80.2	84.5
	inch	1.69	2.35	2.82	3.16	3.33

Shaft bores (● = Round, ■ = Square; ❍ or ❑ = mold to order)

40	mm	■	● / ■	● / ■	■	
60	mm		● / ■	● / ■	■	
90	mm					■
1	inch	●				
1.5	inch	■	● / ■	● / ■	■	
2.5	inch		❍ / ■	● / ■	■	

Standard material: PA, Color: LG
Mold to order: Material: PP, Color: WT

LG (Light gray), WT (White)

All measurements and tolerances apply at 21 °C.
All imperial dimensions (inches) are rounded off.
For detailed sprocket and shaft dimensions see appendix 6.3
Number of sprockets (sprocket spacing distance) see chapter 3.2

Forbo
MOVEMENT SYSTEMS

S8-0 FLT PMU

Profiles with reinforced base to handle high loads



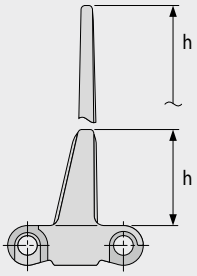

Basic data

Material	Color	Height (h)	
		25.4 mm 1 inch	76 mm 3 inch
POM	BL	●	●
POM-CR	AT	●	●
PP	BL	●	●
PP	LG	●	●
PP	WT	●	●
PA-HT	BK	●	●

Molded width: 152 mm (6.0 in)

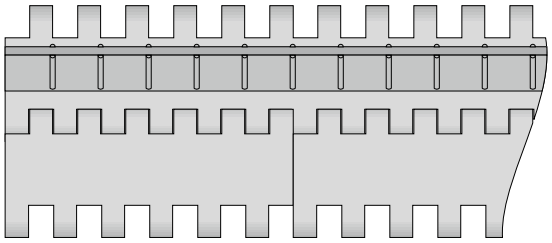

Standard configuration S8-0 FLT PMU

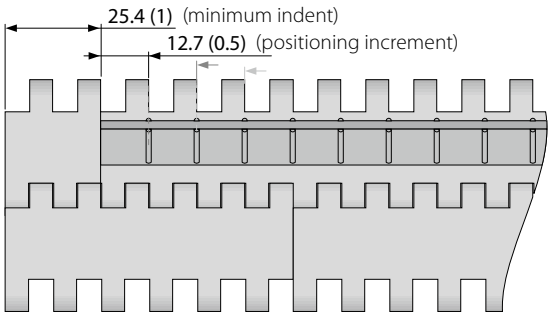

Indent configuration S8-0 FLT PMU

AT (Anthracite), BK (Black), BL (Blue), LG (Light gray), WT (White)

All measurements and tolerances apply at 21 °C; for temperature deviations please see Prolink manual chapter 4.4 "Temperature influence".
All imperial dimensions (inches) are rounded off.
Note: Use of accessory in a belt may impact on the minimum design radii. Please see chapter 6.3 for further information.

S8.1-0 NCL PMU

Highest available Profile for 1 in pitch belts. Extreme impact resistant with reinforced base and rips in TPC1.

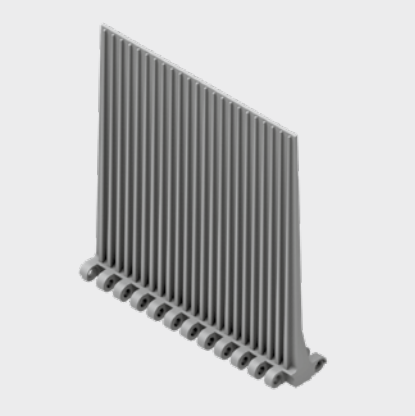

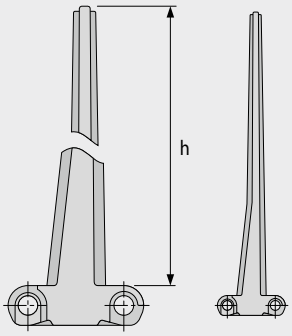

Basic data

Material	Color	Height (h)
		152.4 mm 6 inch
TPC1	LG	●

Molded width: 152 mm (6.0 in)

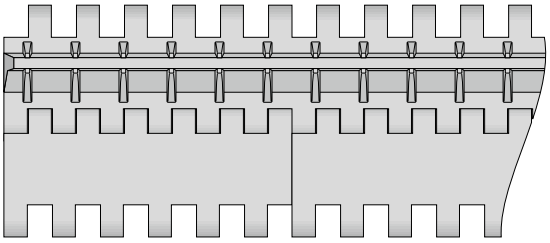

Standard configuration 8.1-0 NCL PMU

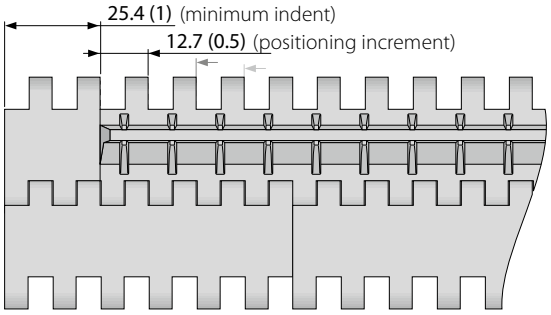

Indent configuration S8.1-0 NCL PMU

LG (Light gray)

All measurements and tolerances apply at 21 °C; for temperature deviations please see Prolink manual chapter 4.4 "Temperature influence".
All imperial dimensions (inches) are rounded off.
Note: Use of accessory in a belt may impact on the minimum design radii. Please see chapter 6.3 for further information.

S8 SG | Side guards

For retention of bulk products (only for modules h_s = 0 mm/in)

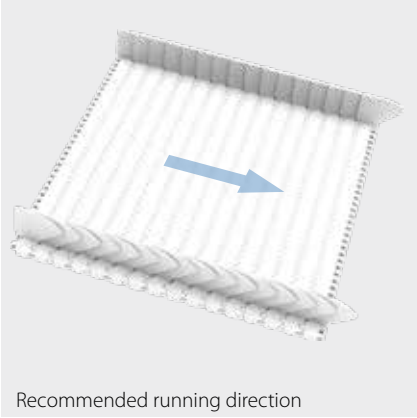

Recommended running direction



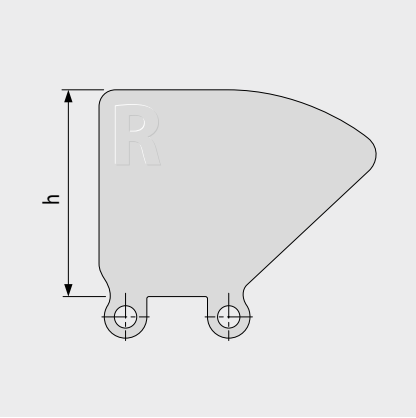

Basic data

Material	Color	Height (h)			
		25 mm 1 inch	50 mm 2 inch	75 mm 3 inch	100 mm 4 inch
PE	LB	●	●	●	●
PE	WT	●	●	●	●
PE-MD	BL	●	●		
PP	LB	●	●	●	●
PP	WT	●	●	●	●

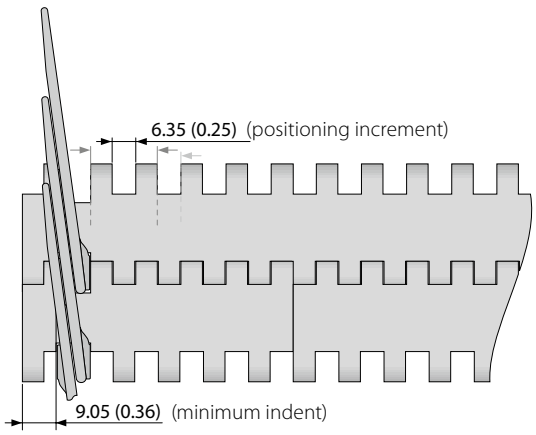

BL (Blue), LB (Light blue), WT (White)

All measurements and tolerances apply at 21 °C; for temperature deviations please see Prolink manual chapter 4.4 "Temperature influence".
All imperial dimensions (inches) are rounded off.
Note: Use of accessory in a belt may impact on the minimum design radii. Please see chapter 6.3 for further information.

S8 HDT | Hold Down Tabs

Used on wider belts to prevent lift an swan neck conveyors | To improve strength, stability and cleanability they are moulded on a narrow module

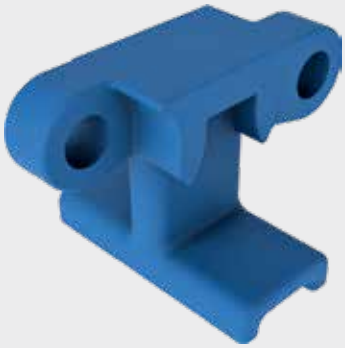

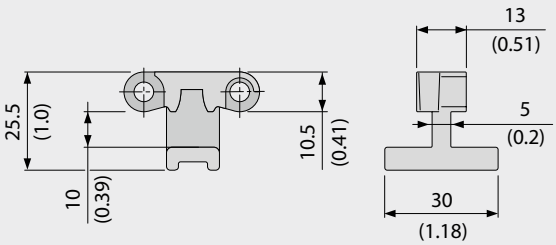

Basic data

Material	Color
POM	BL

Using Hold Down Tabs results in constrains with regards to sprocket and shaft size to ensure sufficient clearance to the shaft (see also chapter 3.3 hold down tabs).

Example

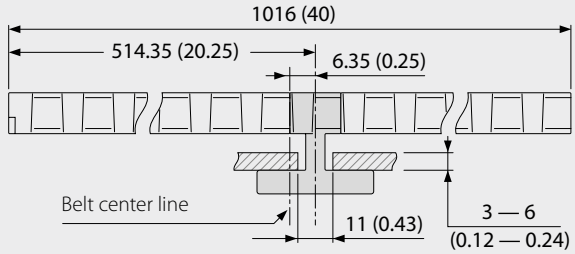

Sprocket options using HDT

Sprocket size (Number of teeth)	Maximum bore round		Maximum bore square	
	[mm]	[inch]	[mm]	[inch]
Z11	40	1.5	30	1.25
Z12	45	1.75	35	1.5
Z15	70	2.75	55	2.0
Z18	95	3.5	70	2.75
Z19	100	3.75	75	3.0

BL (Blue)

All measurements and tolerances apply at 21 °C; for temperature deviations please see Prolink manual chapter 4.4 "Temperature influence".
All imperial dimensions (inches) are rounded off.
Note: Use of accessory in a belt may impact on the minimum design radii. Please see chapter 6.3 for further information.

S8.1 PRR | Pin Retained Rollers

For applications where low back pressure accumulation or product separation is required

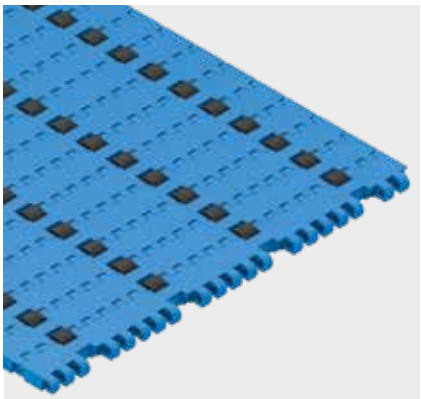

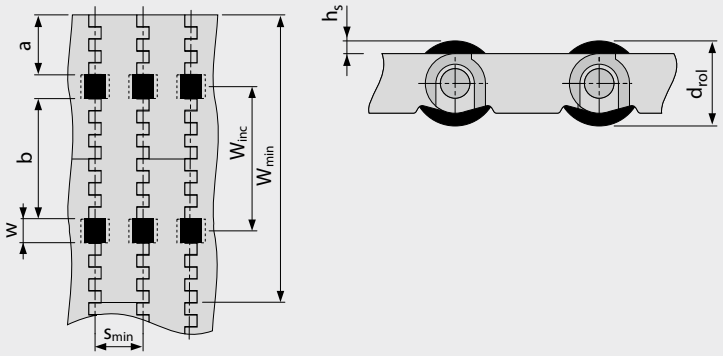

- For low back pressure wearstrips are to be positioned between the rollers
- For product separation the wear-strips are to be positioned below the rollers
- For all materials and surfaces
- Rollers available in POM BK and TPE LG (R10)

Dimensions

w	12.7 mm (0.5 in)	Roller cut out width (roller width 12 mm (0.47 in))
h_s	2.25 mm (0.09 in)	Height of rollers above surface
d_{rol}	15 mm (0.59 in)	Roller diameter
a	31.75 mm (1.25 in)	Minimum indent
b	63.5 mm (2.5 in)	Standard distance between rollers across belt width
s	n x s_{min}	Roller spacing in travel direction (standard: n = 1)
s_{min}	25.4 mm (1.0 in)	Min. roller spacing in travel direction
W_{inc}	76.2 mm (3.0 in)	Width increment
W_{min}	152.4 mm (6.0 in)	Min. belt width
W_B		Belt width
n_{rol}		Number of rollers across belt width

Allowable belt pull

To determine admissible belt pull calculate effective belt width $W_{B,ef}$ by

$W_{B,ef} = W_B - (w \times n_{rol})$

Example: W_B = 228.6 mm (9.0 in); w = 12.7 mm (0.5 in); n_{rol} = 3

$W_{B,ef}$ = 228.6 – (12.7 x 3) = 190.5 mm

$W_{B,ef}$ = 9.0 – (0.5 x 3) = 7.5 in

Note: Sprocket must not be placed inline with rollers. Deviation in roller spacing possible, please get in contact to customer service. Coefficient of friction between belt and conveyed product in accumulation mode μ_{acc} = 0.04, I.e. the accumulation pressure is approx. 4 % of the weight of the backed up product.

All measurements and tolerances apply at 21 °C; for temperature deviations please see Prolink manual chapter 4.4 “Temperature influence“.
All imperial dimensions (inches) are rounded off.
Note: Use of accessory in a belt may impact on the minimum design radii. Please see chapter 6.3 for further information.

LEGEND

① Series
S1 … S19

② Open area/Sprocket size
Percentage open area Format: xx E.g. 20 = 20 %
For sprockets: number of teeth Format: "Z"xx E.g. Z12 = 12 teeth

③ Surface pattern	
BSL	Base module for slider
CTP	Cone top
CUT	Curved top
FLT	Flat top (smooth)
FRT-OG	Friction top without High Grip insert
FRT(X)	Friction top (Design X)
GRT	Grid top
HDK	High Deck
LRB	Lateral rib
MOD	Modified module shape
NCL	No cling
NPY	Negative pyramid
NSK	Non skid
NSK2	Non skid, nonwoven variant
NTP	Nub top (round studs)
PRR	Pin Retained Rollers
RAT	Radius top
RRB	Raised rib
RSA	Reduced surface area
RTP	Roller top
SRS	Slip-resistant surface

④ Type	
BPU	Bucket profile
CAP	Pin lock & belt edge sealing
CCW	Counter clockwise
CLP	Clip
CM	Center module
CW	Clockwise
FPL	Finger plate
HDT	Hold Down Tab
IDL	Idler
INS	Insert
PIN	Coupling rod
PMC	Profile module center
PMU	Profile module universal
PSP	ProSnap
PSU-0	Prof. scoop uni. closed
PSU-X	Prof. scoop uni. x% open
RI	High Grip insert
REL	Reinforcement Link (SS)
ROL	Rollers
RTR	Retaining ring
SG	Module with sideguard
SGL	Side guard, left
SGR	Side guard, right
SLI	Slider
SMA	Side module, A side
SMB	Side module, B side
SML	Side module, left
SMR	Side module, right
SMT	Side module, tight radius
SMU	Side module, universal/both sides
SPR	Sprocket
SPR-SP	Split sprocket, 2-part
SSL	Self stacker side module, left
SSR	Self stacker side module, right
TPL	Turning panel, left
TPR	Turning panel, right
UM	Universal module
WSC	Wheel Stopper Center
WSS	Wheel Stopper Side

⑤ Style	
1.6	1.6 collapse factor
1.7	1.7 collapse factor
2.2	2.2 collapse factor
2.2 G	2.2 collapse factor, guided
A90	Angle 90° to conveying direction
BT	Bearing tab
DR	Double row sprocket
F1, F2, F3 …	Collapse factor modules
G	Guided
GT	Guiding tabs
HD	Hold Down
HR	Hard removable pin
Ixx	xx = indent in mm
RG	Reversed guided
SG	Side guard
SP	Split sprocket
ST	Strong
V2	Version 2 indicates a design update

⑥ Material	
PA	Polyamide
PA-FR	Polyamide flame retadant
PA-FRHC	Polyamide, flame retadant, high conductive
PA-HT	Polyamide high temperature
PBT	Polybutylenterephthalate
PE	Polyethylene
PE-I	PE impact resistant
PE-MD	PE metal detectable
PK	Wear & impact improved polymer
PLX	Special PK for pins with small diameter – higher stiffness
POM	Polyoxymethylene (Polyacetal)
POM-CR	POM cut resistant
POM-HC	POM highly conductive
POM-MD	POM metal detectable
POM-PE	POM side modules + PE center modules
POM-PP	POM side modules + PP center modules
PP	Polypropylene
PP-MD	PP metal detectable
PP-SW	PP steam and hot water resistant
PXX-HC	Self-extinguishing highly conductive material
R1	TPE 80 Shore A, PP
R2	EPDM 80 Shore A, vulcanized
R3	TPE 70 Shore A, POM
R4	TPE 86 Shore A, PP
R5	TPE 52 Shore A, PP
R6	TPE 63 Shore A, POM
R7	TPE 50 Shore A, PP
R8	TPE 55 Shore A, PE
R11	TPE 50 Shore A, POM
SER	Self-extinguishing TPE
SS	Stainless steel
SSS	Stainless steel acid resistant
TPC1	Themoplastic Copolyester
-HA	Supports the HACCP concept
HW	High Wear resistant material

⑦ Color*	
AT	Anthracite
BG	Beige
BK	Black
BL	Blue
DB	Dark blue
GN	Green
LB	Light blue
LG	Light gray
OR	Orange
RE	Red
TQ	Turquoise
UC	Uncolored
WT	White
YL	Yellow

⑧ Height/Diameter/ Bore size and style
Height in mm (in) Format: Hxxx Pin diameter in mm (in) Format: Dxxx
Bore size: SQ (= square) or RD (= round) either in mm or inches Format: SQxxMM or RDxxIN

⑨ Length/Width
Pins Length in mm (in) Format: Lxxx Module width in mm (in) Format: Wxxx REL in mm one decimal Format: Wx.x

* For each series' standard colors please refer to the table of materials for each belt (chapter 1.2). A number of other colors are available on request. Colors can vary from the original due to the print, production processes or material used.