# EXCERPT FROM PROLINK ENGINEERING MANUAL

05/26 (Ref-No. 888)

**siegling prolink**
modular belts

## SERIES 9.1

Side flexing and spiral belts
Pitch 50 mm (1.97 in)



**Forbo Siegling GmbH**
Lilienthalstraße 6/8, D-30179 Hannover
Telefon +49 511 6704 0
www.forbo-siegling.com, siegling@forbo.com

Ref. no. 888-1_1.2_S9.1

# SERIES 9.1 | **OVERVIEW**

siegling prolink
modular belts

Side flexing and spiral belts | Pitch 50 mm (1.97 in)

## Belts for medium to heavy-duty food and non-food applications

**Side view scale 1:1**

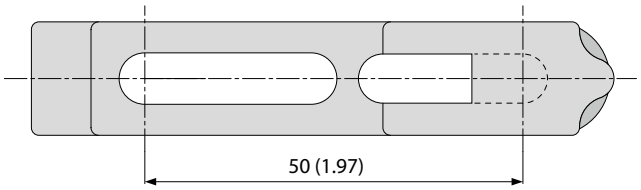


**Available surface pattern and opening area**

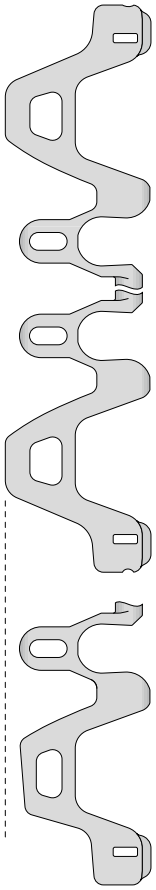

S9.1-57 GRT SMU
Open area (57%),
with grid top

S9.1-57 GRT SMT
Open area (57%), grid top
Can be used on the inner radius
to decrease the collapse factor

**Design characteristics**

- Can be used in spiral towers with cage drives and for straight and radius conveying
- Strong side modules in a brick-laid pattern for exeptional tensile load
- Hinge pins with clip-free attachment
- Stainless steel hinge pins for high load capacity, lateral stiffness, less belt supports and minimum belt lifting in curves
- Adjustable collapse factor of 1.3 – 2.9

**Basic data**

| | |
|---|---|
| Pitch | 50 mm (1.97 in) |
| Belt width min. | 350 mm (13.78 in) |
| Width increments | 50 mm (1.97 in) |
| Hinge pins | 6 mm (0.24 in) made of stainless steel |

Attention:
Due to the very large surface openings, personnel must be instructed not to place their fingers in or on this belt.

**Sprockets**

Single row with round or square bore (for spiral towers with cage drives)

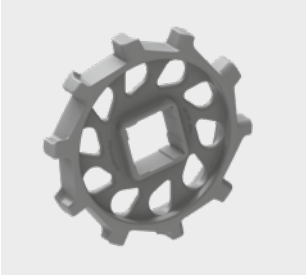

Double row with round or square bore



# SERIES 9.1 | **BELT TYPES**

Side flexing and spiral belt | Pitch 50 mm (1.97 in) | $C_C$ = 1.3 – 2.9

## **S9.1-57 GRT (CW/CCW)** | 57 % Opening | Grid top

Spiral belt | Open area (57 %) for excellent air circulation and drainage | Contact area 31 % (Largest opening: Ø = 24 mm/ 0.94 in) | Lattice-shaped surface | Clip-free hinge pin fitting | Special edge modules (SMT) on the inner radius make the collapse factor adjustable ($C_C$ = 1.3 – 2.9) and ensure smooth conveying

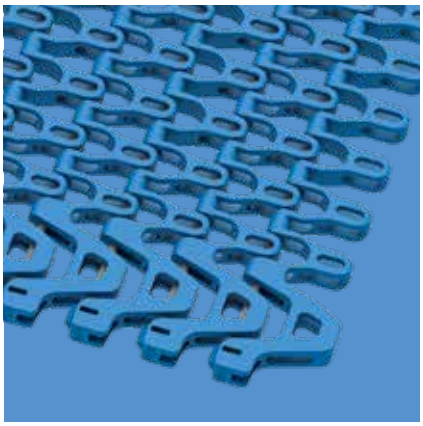

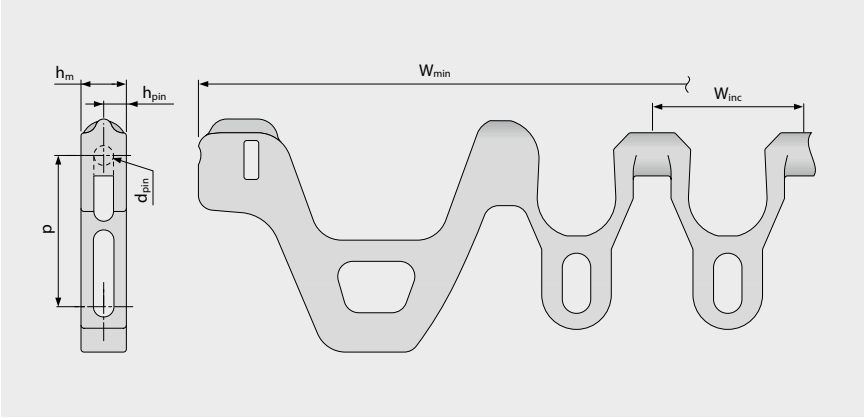


### Belt dimensions

| | p | $d_{pin}$ | $h_m$ | $h_{pin}$ | $h_s$ | $W_{min}$ | $W_{inc}$ | $W_{tol}$ | Minimum flex radii[1] | | | |
|---|---|---|---|---|---|---|---|---|---|---|---|---|
| | Pitch | Pin Ø | Thickness | Pin position | Height | Width min. | Width Increment | Width tolerance [%] | r1 $C_C$ x $W_B$ | r2 | r3 | r4 | r5 |
| mm | 50.0 | 6.0 | 15.0 | 7.5 | 0.0 | 350.0 | 50.0 | ±0.3 | $C_C$ x $W_B$ | 50.0 | 100.0 | 150.0 | 50.0 |
| inch | 1.97 | 0.24 | 0.59 | 0.3 | 0.0 | 13.78 | 1.97 | ±0.3 | $C_C$ x $W_B$ | 1.97 | 3.94 | 5.91 | 1.97 |

$W_B$ = Belt width. $C_C$ see table on the following page

### Available standard materials [3]

| Belt | | Pin | Nominal belt pull, straight | | Nominal belt pull, curve | | Weight | | Width deviation | Temperature | | Certificates[2] | | |
|---|---|---|---|---|---|---|---|---|---|---|---|---|---|---|
| Material | Color | Material | [N/mm] | [lb/ft] | [N] | [lb] | [kg/m²] | [lb/ft²] | [%] | [°C] | [°F] | FDA | EU | MHLW |
| PA | BL | SS | 24 | 1645 | 2000 | 450 | 11.3 | 2.31 | 0.27 | -40/120 | -40/248 | ● | ● | ● |
| POM-CR | BL | SS | 30 | 2056 | 2800 | 629 | 11.5 | 2.36 | 0.0 | -45/90 | -49/194 | ● | ● | ● |

More design information available in Chapter 3.3 and 5.2.

**Attention!** Due to the very large surface openings, personnel must be instructed not to place their fingers in or on this belt.

BL (Blue)

All measurements and tolerances apply at 21 °C; for temperature deviations please see Prolink manual chapter 4.4 "Temperature influence".
All imperial dimensions (inches) are rounded off.

[1] Flex radii: r1 = side flex, r2 = front flex on roller, r3 = back flex on load bearing roller, r4 = back flex on Hold Down shoe, r5 = back flex on roller

[2] Complies with FDA 21 CFR | Complies with (EU) 10/2011 and (EC) 1935/2004 regulations regarding the raw materials used and the migration thresholds | Complies with Japanese MHLW Notification 370

● = available | – = not available | empty cells = not tested

[3] More materials and colors on request

Forbo MOVEMENT SYSTEMS

Variant specific dimensions [mm (in)]

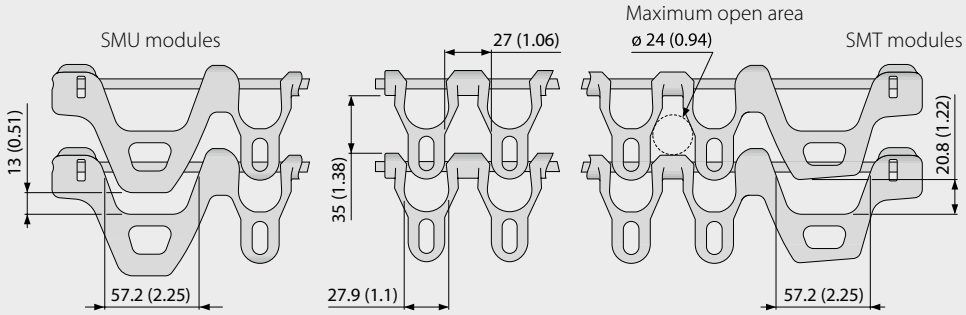


## Module distribution on the inner radius for various collapse factors

| S9.1 Collapse factor | Belt edge structure on the inner radius (row #) | | | | | | | | | | % on the inner | |
|---|---|---|---|---|---|---|---|---|---|---|---|---|
| | 1 | 2 | 3 | 4 | 5 | 6 | 7 | 8 | 9 | 10 | % SMU | % SMT |
| 1.3 | | | | | | | | | | | 0 | 100 |
| 1.4 | | | | | | | | | | | 10 | 90 |
| 1.5 | | | | | | | | | | | 20 | 80 |
| 1.6 | | | | | | | | | | | 25 | 75 |
| 1.7 | | | | | | | | | | | 33.33 | 66.67 |
| 1.8 | | | | | | | | | | | 40 | 60 |
| 1.9 | | | | | | | | | | | 50 | 50 |
| 2.1 | | | | | | | | | | | 60 | 40 |
| 2.2 | | | | | | | | | | | 66.66 | 33.34 |
| 2.4 | | | | | | | | | | | 75 | 25 |
| 2.5 | | | | | | | | | | | 80 | 20 |
| 2.7 | | | | | | | | | | | 90 | 10 |
| 2.9 | | | | | | | | | | | 100 | 0 |

Color Code for POM-CR material:
- S9.1 SMT (Side Module Tight)
- S9.1 SMU (Side Module Universal)

Color Code for PA material:
- S9.1 SMT (Side Module Tight)
- S9.1 SMU (Side Module Universal)

For further information on calculating the collapse factor, see page III-32.

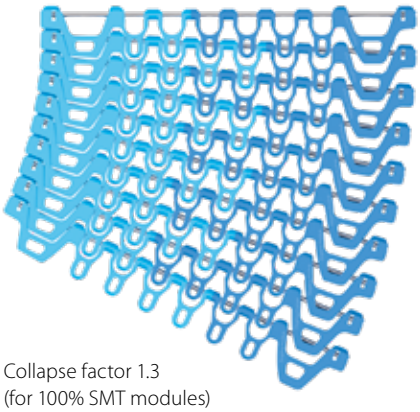

Collapse factor 1.3
(for 100% SMT modules)

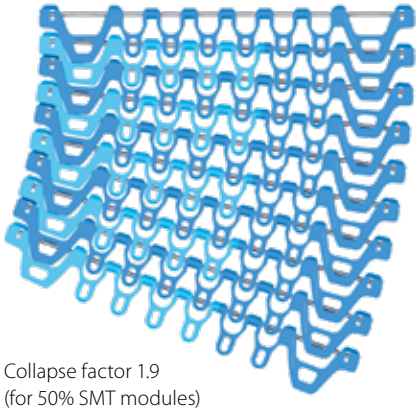

Collapse factor 1.9
(for 50% SMT modules)

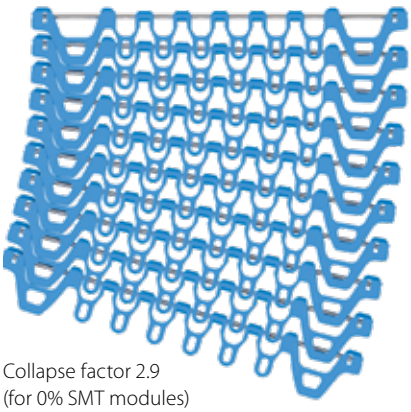

Collapse factor 2.9
(for 0% SMT modules)

## **S9.1 SPR** | Sprockets

Single-row sprocket for series 9.1 and series 9 in spiral applications

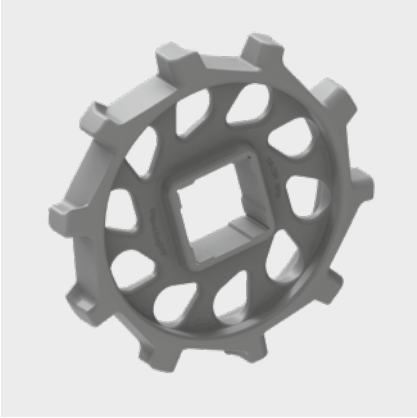

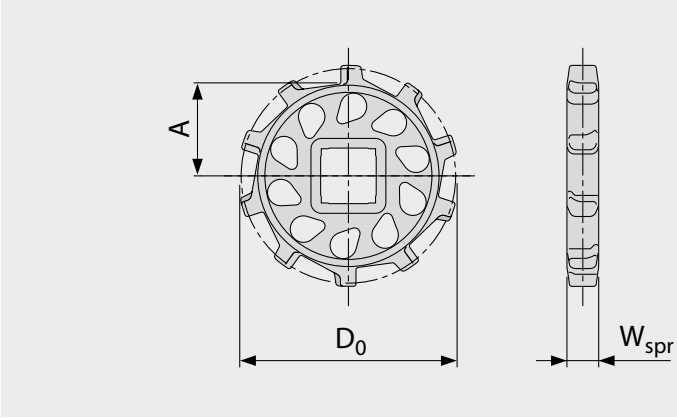


### Main dimensions

| Sprocket size (Number of teeth) | | Z10 |
|---|---|---|
| $W_{spr}$ | mm | 24.0 |
| | inch | 0.94 |
| $D_0$ | mm | 161.8 |
| | inch | 6.37 |
| $A_{max}$ | mm | 73.4 |
| | inch | 2.89 |
| $A_{min}$ | mm | 69.8 |
| | inch | 2.75 |

### **Shaft bores** (● = Round, ■ = Square)

| | | |
|---|---|---|
| 40 | mm | ● / ■ |
| 1.5 | inch | ■ |
| 2.0 | inch | ● |

### Recommended usage

| Belt | Application | Recommended usage |
|---|---|---|
| S9.1-57 GRT | Straight/curved | This sprocket is not recommended |
| S9.1-57 GRT | Spiral tower with cage drive | Use in main conveying direction, only for a short time in the opposite direction and not under load |

Material: PA, Color: LG

LG (Light gray)

All measurements and tolerances apply at 21 °C.
All imperial dimensions (inches) are rounded off.
For detailed sprocket and shaft dimensions see appendix 6.3
Number of sprockets (sprocket spacing distance) see chapter 3.2

## **S9 SPR DR** | Sprockets

Double-row sprocket for series 9 and restricted use in series 9.1

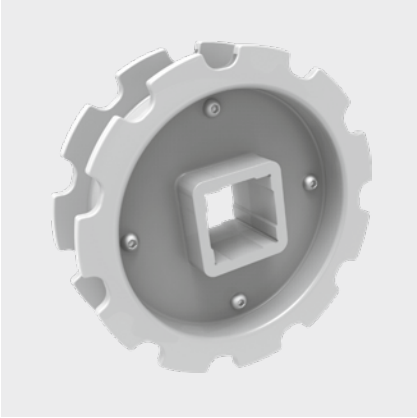

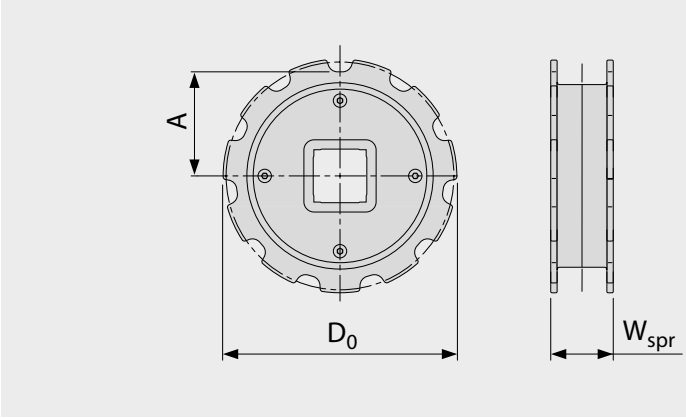


### Main dimensions

| Sprocket size (Number of teeth) | | Z11 |
|---|---|---|
| $W_{spr}$ | mm | 49.0 |
| | inch | 1.93 |
| $D_0$ | mm | 178.8 |
| | inch | 7.04 |
| $A_{max}$ | mm | 81.9 |
| | inch | 3.22 |
| $A_{min}$ | mm | 77.4 |
| | inch | 3.05 |

### **Shaft bores** (● = Round, ■ = Square; ❍ or ❑ = mold to order)

| | | |
|---|---|---|
| 40 | mm | ● / ■ |
| 1.5 | inch | ❑ |

### Recommended usage

| Belt | Application | Recommended usage |
|---|---|---|
| S9.1-57 GRT | Straight/curved | Use in main conveying direction, only for a short time in the opposite direction and not under load |
| S9.1-57 GRT | Spiral tower with cage drive | This sprocket is not recommended |

Material: POM, Color: UC

UC (Uncolored)

All measurements and tolerances apply at 21 °C.
All imperial dimensions (inches) are rounded off.
For detailed sprocket and shaft dimensions see appendix 6.3
Number of sprockets (sprocket spacing distance) see chapter 3.2

# SERIES 9.1 | **INSTALLATION NOTES**

Side flexing and spiral belt | Pitch 50 mm (1.97 in)

**Preferred travel direction**

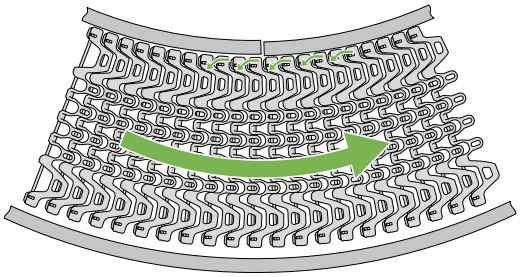

Curve conveyor

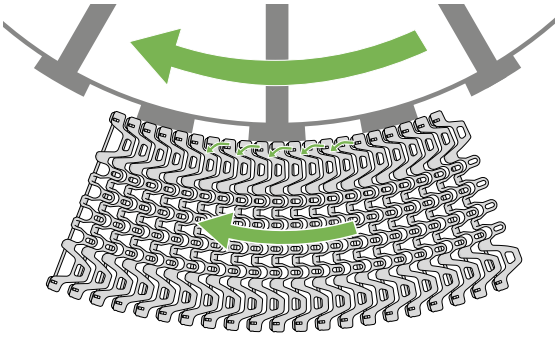

Cage driven spiral

**Curve direction S9.1 -> Belt CW (ClockWise)**

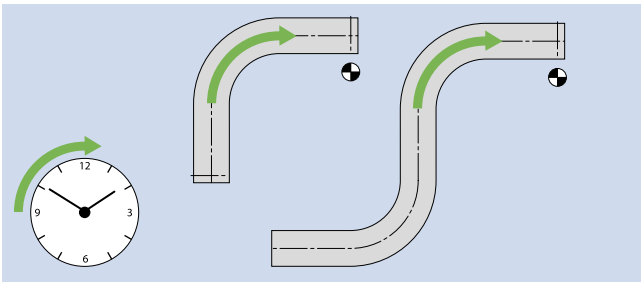


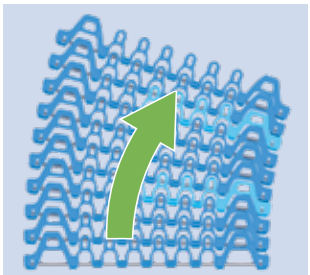

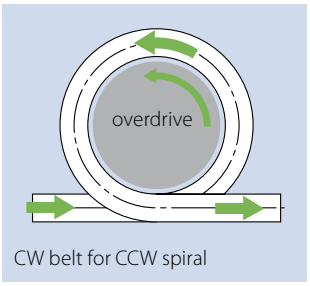


CW belt for CCW spiral

**Curve direction S9.1 -> Belt CCW (Counter ClockWise)**

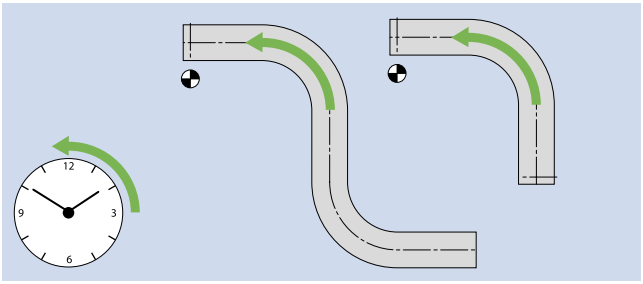


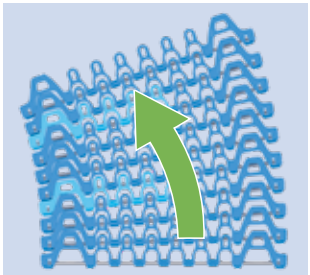

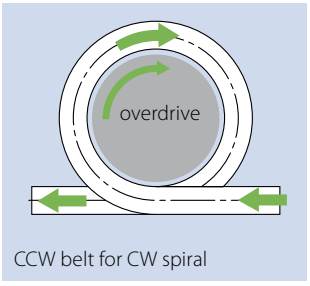


CCW belt for CW spiral

**Sprocket installation**

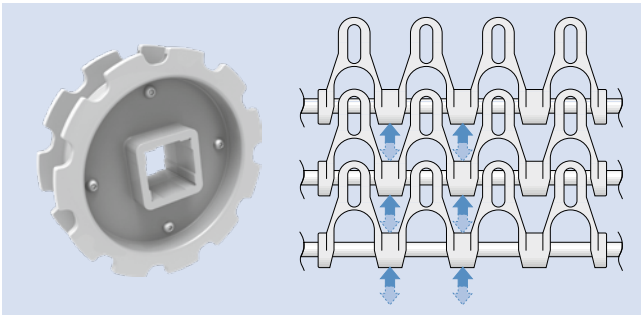

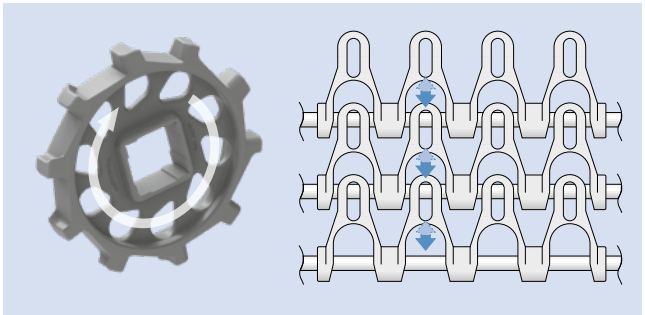





Further information in chapter 3 and 5

MOVEMENT SYSTEMS

# LEGEND

| ① Series |
|---|
| S1 … S19 |

| ② Open area/Sprocket size |
|---|
| Percentage open area<br>Format: xx<br>E.g. 20 = 20 % |
| For sprockets: number of teeth<br>Format: "Z"xx<br>E.g. Z12 = 12 teeth |

| ③ Surface pattern | |
|---|---|
| **BSL** | Base module for slider |
| **CTP** | Cone top |
| **CUT** | Curved top |
| **FLT** | Flat top (smooth) |
| **FRT-OG** | Friction top without High Grip insert |
| **FRT(X)** | Friction top (Design X) |
| **GRT** | Grid top |
| **HDK** | High Deck |
| **LRB** | Lateral rib |
| **MOD** | Modified module shape |
| **NCL** | No cling |
| **NPY** | Negative pyramid |
| **NSK** | Non skid |
| **NSK2** | Non skid, nonwoven variant |
| **NTP** | Nub top (round studs) |
| **PRR** | Pin Retained Rollers |
| **RAT** | Radius top |
| **RRB** | Raised rib |
| **RSA** | Reduced surface area |
| **RTP** | Roller top |
| **SRS** | Slip-resistant surface |

| ④ Type | |
|---|---|
| **BPU** | Bucket profile |
| **CAP** | Pin lock & belt edge sealing |
| **CCW** | Counter clockwise |
| **CLP** | Clip |
| **CM** | Center module |
| **CW** | Clockwise |
| **FPL** | Finger plate |
| **HDT** | Hold Down Tab |
| **IDL** | Idler |
| **INS** | Insert |
| **PIN** | Coupling rod |
| **PMC** | Profile module center |
| **PMU** | Profile module universal |
| **PSP** | ProSnap |
| **PSU-0** | Prof. scoop uni. closed |
| **PSU-X** | Prof. scoop uni. x% open |
| **RI** | High Grip insert |
| **REL** | Reinforcement Link (SS) |
| **ROL** | Rollers |
| **RTR** | Retaining ring |
| **SG** | Module with sideguard |
| **SGL** | Side guard, left |
| **SGR** | Side guard, right |
| **SLI** | Slider |
| **SMA** | Side module, A side |
| **SMB** | Side module, B side |
| **SML** | Side module, left |
| **SMR** | Side module, right |
| **SMT** | Side module, tight radius |
| **SMU** | Side module, universal/both sides |
| **SPR** | Sprocket |
| **SPR-SP** | Split sprocket, 2-part |
| **SSL** | Self stacker side module, left |
| **SSR** | Self stacker side module, right |
| **TPL** | Turning panel, left |
| **TPR** | Turning panel, right |
| **UM** | Universal module |
| **WSC** | Wheel Stopper Center |
| **WSS** | Wheel Stopper Side |

| ⑤ Style | |
|---|---|
| **1.6** | 1.6 collapse factor |
| **1.7** | 1.7 collapse factor |
| **2.2** | 2.2 collapse factor |
| **2.2 G** | 2.2 collapse factor, guided |
| **A90** | Angle 90° to conveying direction |
| **BT** | Bearing tab |
| **DR** | Double row sprocket |
| **F1, F2, F3 …** | Collapse factor modules |
| **G** | Guided |
| **GT** | Guiding tabs |
| **HD** | Hold Down |
| **HR** | Hard removable pin |
| **Ixx** | xx = indent in mm |
| **RG** | Reversed guided |
| **SG** | Side guard |
| **SP** | Split sprocket |
| **ST** | Strong |
| **V2** | Version 2 indicates a design update |

| ⑥ Material | |
|---|---|
| **PA** | Polyamide |
| **PA-FR** | Polyamide flame retadant |
| **PA-FRHC** | Polyamide, flame retadant, high conductive |
| **PA-HT** | Polyamide high temperature |
| **PBT** | Polybutylenterephthalate |
| **PE** | Polyethylene |
| **PE-I** | PE impact resistant |
| **PE-MD** | PE metal detectable |
| **PK** | Wear & impact improved polymer |
| **PLX** | Special PK for pins with small diameter – higher stiffness |
| **POM** | Polyoxymethylene (Polyacetal) |
| **POM-CR** | POM cut resistant |
| **POM-HC** | POM highly conductive |
| **POM-MD** | POM metal detectable |
| **POM-PE** | POM side modules + PE center modules |
| **POM-PP** | POM side modules + PP center modules |
| **PP** | Polypropylene |
| **PP-MD** | PP metal detectable |
| **PP-SW** | PP steam and hot water resistant |
| **PXX-HC** | Self-extinguishing highly conductive material |
| **R1** | TPE 80 Shore A, PP |
| **R2** | EPDM 80 Shore A, vulcanized |
| **R3** | TPE 70 Shore A, POM |
| **R4** | TPE 86 Shore A, PP |
| **R5** | TPE 52 Shore A, PP |
| **R6** | TPE 63 Shore A, POM |
| **R7** | TPE 50 Shore A, PP |
| **R8** | TPE 55 Shore A, PE |
| **R11** | TPE 50 Shore A, POM |
| **SER** | Self-extinguishing TPE |
| **SS** | Stainless steel |
| **SSS** | Stainless steel acid resistant |
| **TPC1** | Themoplastic Copolyester |
| **-HA** | Supports the HACCP concept |
| **HW** | High Wear resistant material |

| ⑦ Color* | |
|---|---|
| **AT** | Anthracite |
| **BG** | Beige |
| **BK** | Black |
| **BL** | Blue |
| **DB** | Dark blue |
| **GN** | Green |
| **LB** | Light blue |
| **LG** | Light gray |
| **OR** | Orange |
| **RE** | Red |
| **TQ** | Turquoise |
| **UC** | Uncolored |
| **WT** | White |
| **YL** | Yellow |

| ⑧ Height/Diameter/ Bore size and style |
|---|
| Height in mm (in)<br>Format: Hxxx<br>Pin diameter in mm (in)<br>Format: Dxxx |
| Bore size: SQ (= square) or RD (= round) either in mm or inches<br>Format: SQxxMM or RDxxIN |

| ⑨ Length/Width |
|---|
| Pins Length in mm (in)<br>Format: Lxxx<br>Module width in mm (in)<br>Format: Wxxx<br>REL in mm one decimal<br>Format: Wx.x |

* For each series' standard colors please refer to the table of materials for each belt (chapter 1.2). A number of other colors are available on request. Colors can vary from the original due to the print, production processes or material used.