EXCERPT FROM PROLINK ENGINEERING MANUAL

05/26 (Ref-No. 888)

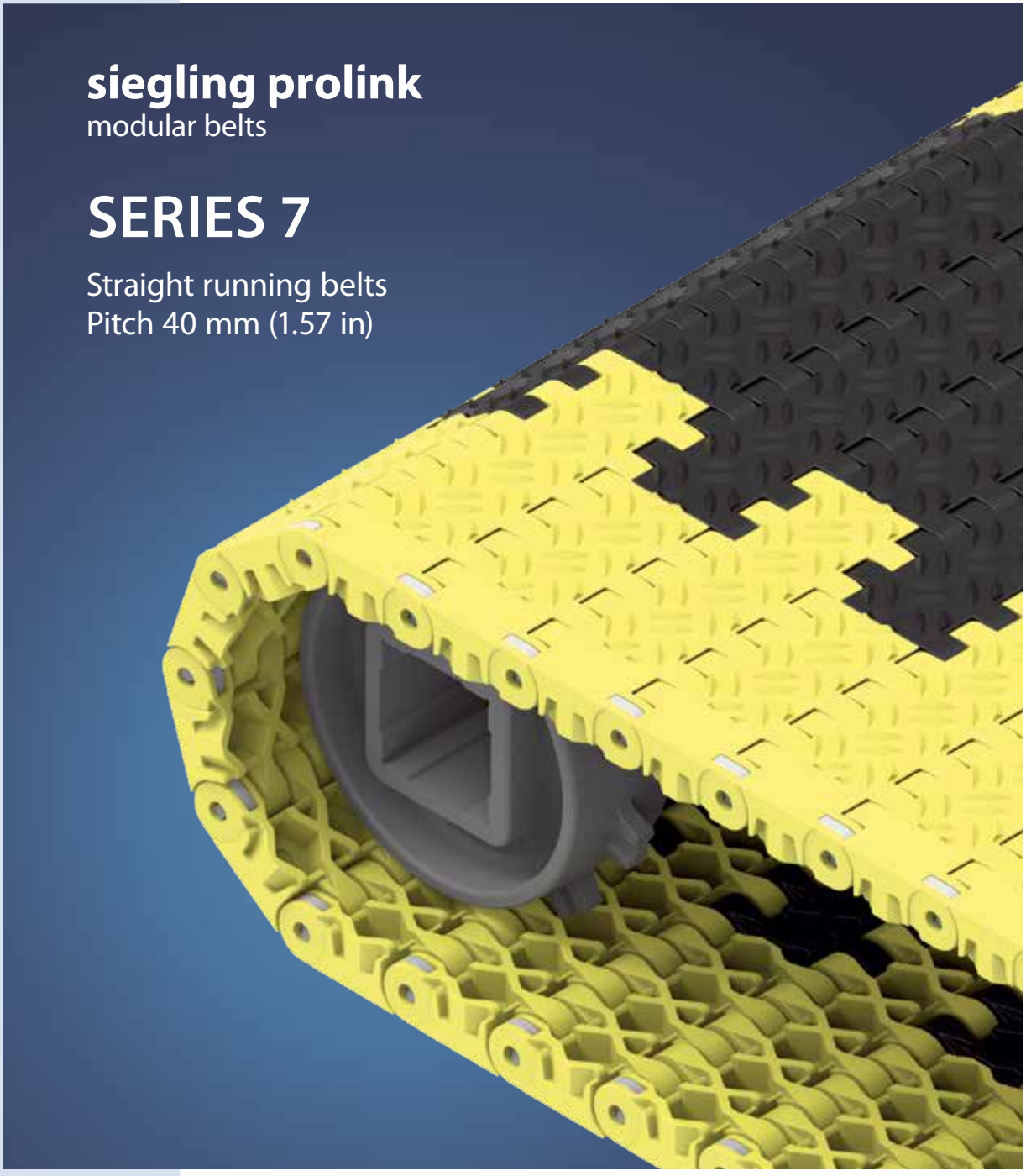

Forbo Siegling GmbH
Lilienthalstraße 6/8, D-30179 Hannover
Telefon +49 511 6704 0
www.forbo-siegling.com, siegling@forbo.com

Ref. no. 888-1_1.2_S7

SERIES 7 | **OVERVIEW**

Straight running belts | Pitch 40 mm (1.57 in)

siegling prolink
modular belts

Belts for heavy-duty non-food applications

Side view scale 1:1

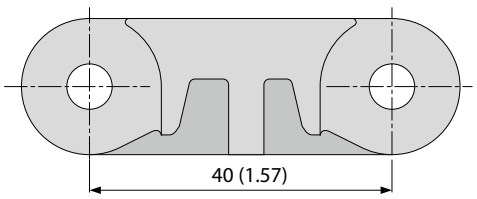

Design characteristics

- Closed-hinge design provides high belt pull capacity
- Small-pitch relative to belt thickness makes belt suitable for compact, heavily loaded conveyors
- Robust design with large surface contact area ensures superior wear life
- Closed solid edge
- Flame retardant version available (PXX-HC – in line with DIN EN 13501-1)

Available surface pattern and opening area

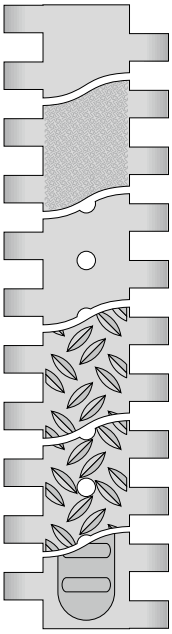

S7-0 FLT
Closed, smooth surface

S7-0 SRS
Closed, slip-resistant surface

S7-6 FLT
Open (6 %), smooth surface

S7-0 NSK
Closed surface with non skid pattern

S7-6 NSK
Open (6 %) surface with non skid pattern

S7-0 FRT1
Closed surface with friction top

Basic data

Pitch	40 mm (1.57 in)
Belt width min.	80 mm (3.15 in) 360 mm (14.2 in) for belts with FRT-surface (side modules only available without FRT-surface)
Width increments	20 mm (0.8 in) FRT-surface on request
Hinge pins	6 mm (0.24 in) made of plastic (PBT) or stainless steel

Sprockets
in different sizes with round or square bore



Wheelstopper
used for securing the position of vehicles on the belt



SERIES 7 | **BELT TYPES**

siegling prolink
modular belts

Straight running belt | Pitch 40 mm (1.57 in)

S7-0 FLT | 0 % Opening | Flat top

Closed, smooth surface | Flat top surface

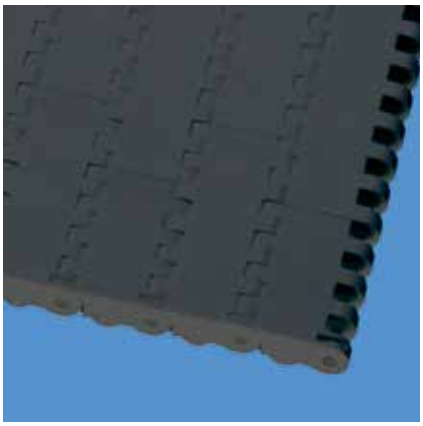

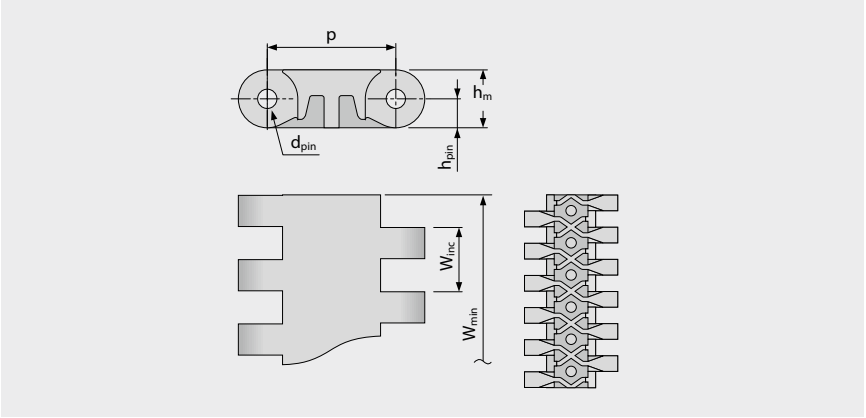

Belt dimensions

	p	d_{pin}	h_m	h_{pin}	h_s	W_{min}	W_{inc}	W_{tol}	Minimum flex radii[1]				
	Pitch	Pin Ø	Thickness	Pin position	Height	Width min.	Width Increment	Width tolerance [%]	r1 C_c x W_B	r2	r3	r4	r5
mm	40.0	6.0	18.0	9.0	0.0	80.0	20.0	±0.2	–	40.0	80.0	120.0	40.0
inch	1.57	0.24	0.71	0.35	0.0	3.15	0.79	±0.2	–	1.57	3.15	4.72	1.57

Available standard materials [3]

Belt		Pin		Nominal belt pull, straight		Weight		Width deviation	Temperature		Certificates[2]
Material	Color	Material	Color	[N/mm]	[lb/ft]	[kg/m²]	[lb/ft²]	[%]	[°C]	[°F]	Flame retardant
POM	AT	PBT	UC	50	3426	18.3	3.75	-0.75	-45/90	-49/194	–
POM	AT	SS		60	4111	22.8	4.67	-0.75	-45/90	-49/194	–
POM	YL	PBT	UC	50	3426	18.3	3.75	-0.75	-45/90	-49/194	–
POM	YL	SS		60	4111	22.8	4.67	-0.75	-45/90	-49/194	–
POM-HC	AT	PBT	UC	50	3426	18.8	3.85	-0.75	-45/90	-49/194	–
POM-HC	AT	SS		60	4111	23.3	4.77	-0.75	-45/90	-49/194	–
Mold to order belts											
PE		PE	UC	18	1233	12.3	2.52	-0.35	-70/65	-94/149	–
PP		PP	WT	30	2056	11.6	2.38	0.0	5/100	41/212	–
PP		SS		30	2056	16.5	3.38	0.0	5/100	41/212	–
PXX-HC	BK	PBT	UC	30	2056	12.8	2.62	-0.13	5/100	41/212	●
PXX-HC	BK	SS		30	2056	17.7	3.63	-0.13	5/100	41/212	●

AT (Anthracite), BK (Black), UC (Uncolored), WT (White), YL (Yellow)

All measurements and tolerances apply at 21 °C; for temperature deviations please see Prolink manual chapter 4.4 "Temperature influence".
All imperial dimensions (inches) are rounded off.

[1] Flex radii: r1 = side flex, r2 = front flex on roller, r3 = back flex on load bearing roller, r4 = back flex on Hold Down shoe, r5 = back flex on roller

[2] Complies with DIN EN 13501-1 Cfl-s1 (and DIN 4102 B1)

● = available | – = not available | empty cells = not tested

[3] More materials and colors on request

Forbo
MOVEMENT SYSTEMS

SERIES 7 | **BELT TYPES**

siegling prolink
modular belts

Straight running belt | Pitch 40 mm (1.57 in)

S7-0 SRS | 0 % Opening | Slip-resistant

Closed surface | Slip-resistant surface, pleasant to walk and kneel on | Flat top surface

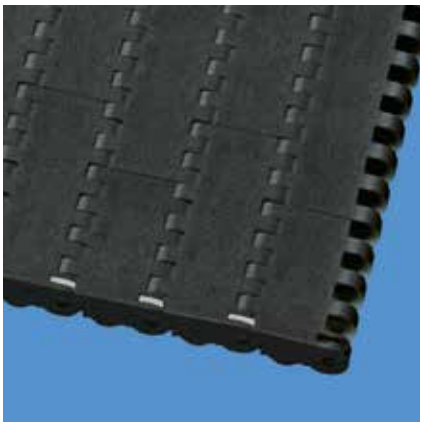

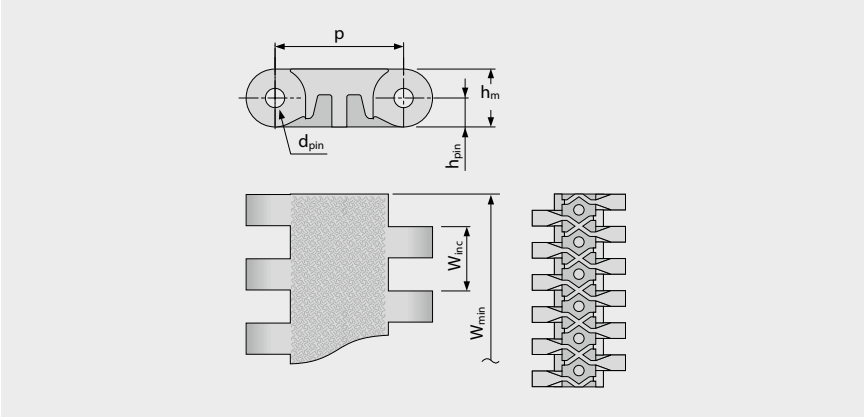

Belt dimensions

	p	d_{pin}	h_m	h_{pin}	h_s	W_{min}	W_{inc}	W_{tol}	Minimum flex radii[1]				
	Pitch	Pin Ø	Thickness	Pin position	Height	Width min.	Width Increment	Width tolerance [%]	r1 C_c x W_B	r2	r3	r4	r5
mm	40.0	6.0	18.0	9.0	0.0	80.0	20.0	±0.2	–	40.0	80.0	120.0	40.0
inch	1.57	0.24	0.71	0.35	0.0	3.15	0.79	±0.2	–	1.57	3.15	4.72	1.57

Available standard materials [3]

Belt		Pin		Nominal belt pull, straight		Weight		Width deviation	Temperature		Certificates[2]
Material	Color	Material	Color	[N/mm]	[lb/ft]	[kg/m²]	[lb/ft²]	[%]	[°C]	[°F]	Flame retardant
POM	AT	PBT	UC	50	3426	18.3	3.75	-0.75	-45/90	-49/194	–
POM	AT	SS		60	4111	22.8	4.67	-0.75	-45/90	-49/194	–
POM	YL	PBT	UC	50	3426	18.3	3.75	-0.75	-45/90	-49/194	–
POM	YL	SS		60	4111	22.8	4.67	-0.75	-45/90	-49/194	–
POM-HC	AT	PBT	UC	50	3426	18.8	3.85	-0.75	-45/90	-49/194	–
POM-HC	AT	SS		60	4111	23.3	4.77	-0.75	-45/90	-49/194	–
PXX-HC	BK	PBT	UC	30	2056	12.8	2.62	-0.13	5/100	41/212	●
PXX-HC	BK	SS		30	2056	17.7	3.63	-0.13	5/100	41/212	●

■ AT (Anthracite), ■ BK (Black), □ UC (Uncolored), ■ YL (Yellow)

All measurements and tolerances apply at 21 °C; for temperature deviations please see Prolink manual chapter 4.4 "Temperature influence".
All imperial dimensions (inches) are rounded off.

[1] Flex radii: r1 = side flex, r2 = front flex on roller, r3 = back flex on load bearing roller, r4 = back flex on Hold Down shoe, r5 = back flex on roller

[2] Complies with DIN EN 13501-1 Cfl-s1 (and DIN 4102 B1)

● = available | – = not available | empty cells = not tested

[3] More materials and colors on request

Forbo
MOVEMENT SYSTEMS

SERIES 7 | **BELT TYPES**

siegling prolink
modular belts

Straight running belt | Pitch 40 mm (1.57 in)

S7-6 FLT | 6 % Opening | Flat top

Open area (6 %) increases drainage capacity | Smooth surface

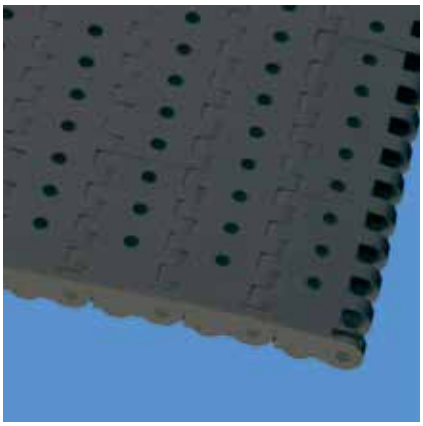

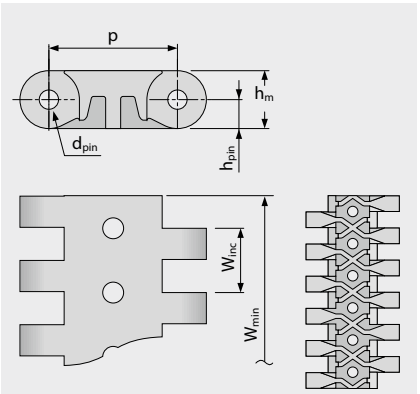

Variant specific dimensions [mm (in)]

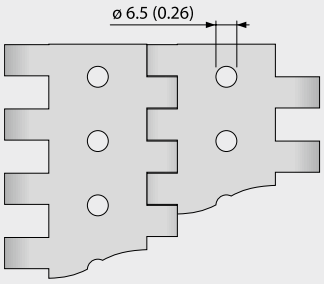

Belt dimensions

	p	d_{pin}	h_m	h_{pin}	h_s	W_{min}	W_{inc}	W_{tol}	Minimum flex radii[1]				
	Pitch	Pin Ø	Thickness	Pin position	Height	Width min.	Width Increment	Width tolerance [%]	r1 C_c x W_B	r2	r3	r4	r5
mm	40.0	6.0	18.0	9.0	0.0	80.0	20.0	±0.2	–	40.0	80.0	120.0	40.0
inch	1.57	0.24	0.71	0.35	0.0	3.15	0.79	±0.2	–	1.57	3.15	4.72	1.57

Available standard materials [3]

Belt		Pin		Nominal belt pull, straight		Weight		Width deviation	Temperature		Certificates[2]
Material	Color	Material	Color	[N/mm]	[lb/ft]	[kg/m²]	[lb/ft²]	[%]	[°C]	[°F]	Flame retardant
POM	AT	PBT	UC	50	3426	16.8	3.44	-0.7	-45/90	-49/194	–
POM	AT	SS		60	4111	21.3	4.36	-0.7	-45/90	-49/194	–
Mold to order belts											
PE		PE	UC	18	1233	11.3	2.31	0.0	-70/65	-94/149	–
POM-HC	AT	PBT	UC	50	3426	17.3	3.54	-0.75	-45/90	-49/194	–
POM-HC	AT	SS		60	4111	21.4	4.38	-0.75	-45/90	-49/194	–
PP		PP	WT	30	2056	10.7	2.19	0.0	5/100	41/212	–
PP		SS		30	2056	15.6	3.2	0.0	5/100	41/212	–
PXX-HC	BK	PBT	UC	30	2056	11.8	2.42	-0.13	5/100	41/212	●
PXX-HC	BK	SS		30	2056	16.3	3.34	-0.13	5/100	41/212	●

AT (Anthracite), BK (Black), UC (Uncolored), WT (White)

All measurements and tolerances apply at 21 °C; for temperature deviations please see Prolink manual chapter 4.4 "Temperature influence".
All imperial dimensions (inches) are rounded off.

[1] Flex radii: r1 = side flex, r2 = front flex on roller, r3 = back flex on load bearing roller, r4 = back flex on Hold Down shoe, r5 = back flex on roller

[2] Complies with DIN EN 13501-1 Cfl-s1 (and DIN 4102 B1)

● = available | – = not available | empty cells = not tested

[3] More materials and colors on request

Forbo
MOVEMENT SYSTEMS

SERIES 7 | **BELT TYPES**

siegling prolink
modular belts

Straight running belt | Pitch 40 mm (1.57 in)

S7-0 NSK | 0 % Opening | Non skid

Closed surface | Non skid surface for safety when walking on belt



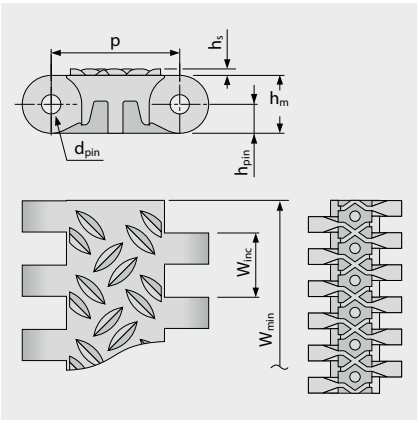

Variant specific dimensions [mm (in)]

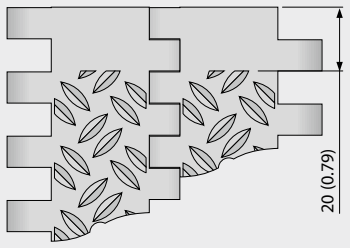

Belt dimensions

	p	d_{pin}	h_m	h_{pin}	h_s	W_{min}	W_{inc}	W_{tol}	Minimum flex radii[1]				
	Pitch	Pin Ø	Thickness	Pin position	Height	Width min.	Width Increment	Width tolerance [%]	r1 C_c x W_B	r2	r3	r4	r5
mm	40.0	6.0	18.0	9.0	2.0	80.0	20.0	±0.2	–	40.0	80.0	120.0	40.0
inch	1.57	0.24	0.71	0.35	0.08	3.15	0.79	±0.2	–	1.57	3.15	4.72	1.57

Available standard materials [3]

Belt		Pin		Nominal belt pull, straight		Weight		Width deviation	Temperature		Certificates[2]
Material	Color	Material	Color	[N/mm]	[lb/ft]	[kg/m²]	[lb/ft²]	[%]	[°C]	[°F]	Flame retardant
POM	AT	PBT	UC	50	3426	19.0	3.89	-0.75	-45/90	-49/194	–
POM	AT	SS		60	4111	23.5	4.81	-0.75	-45/90	-49/194	–
POM-HC	AT	PBT	UC	50	3426	19.5	3.99	-0.75	-45/90	-49/194	–
POM-HC	AT	SS		60	4111	24.0	4.92	-0.75	-45/90	-49/194	–
PXX-HC	BK	PBT	UC	30	2056	14.6	2.99	-0.13	5/100	41/212	●
PXX-HC	BK	SS		30	2056	20.0	4.1	-0.13	5/100	41/212	●
Mold to order belts											
PP		PP	WT	30	2056	13.3	2.72	0.0	5/100	41/212	–
PP		SS		30	2056	18.2	3.73	0.0	5/100	41/212	–

■ AT (Anthracite), ■ BK (Black), □ UC (Uncolored), □ WT (White)

All measurements and tolerances apply at 21 °C; for temperature deviations please see Prolink manual chapter 4.4 "Temperature influence".
All imperial dimensions (inches) are rounded off.

[1] Flex radii: r1 = side flex, r2 = front flex on roller, r3 = back flex on load bearing roller, r4 = back flex on Hold Down shoe, r5 = back flex on roller

[2] Complies with DIN EN 13501-1 Cfl-s1 (and DIN 4102 B1)

● = available | – = not available | empty cells = not tested

[3] More materials and colors on request

forbo
MOVEMENT SYSTEMS

SERIES 7 | **BELT TYPES**

siegling prolink
modular belts

Straight running belt | Pitch 40 mm (1.57 in)

S7-6 NSK | 6 % Opening | Non skid

Open area (6 %) | Non skid surface with drainage holes for safety when walking on wet belts

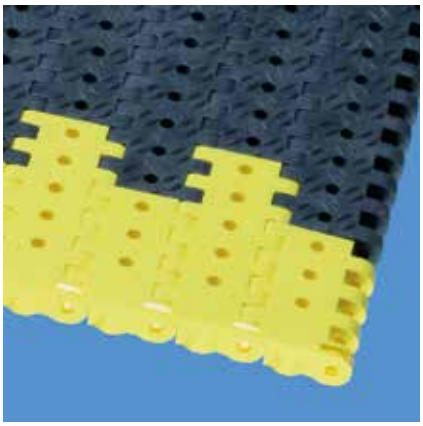

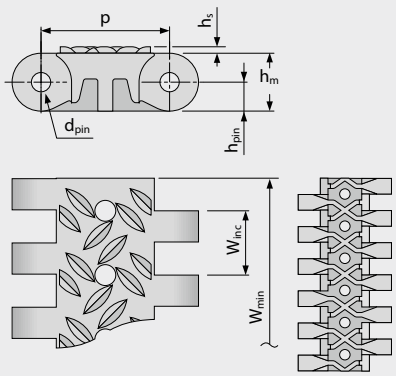

Variant specific dimensions [mm (in)]

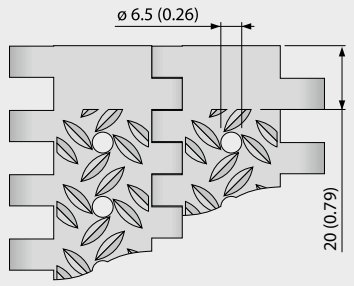

Belt dimensions

	p	d_{pin}	h_m	h_{pin}	h_s	W_{min}	W_{inc}	W_{tol}	Minimum flex radii[1]				
	Pitch	Pin Ø	Thickness	Pin position	Height	Width min.	Width Increment	Width tolerance [%]	r1 C_c x W_B	r2	r3	r4	r5
mm	40.0	6.0	18.0	9.0	2.0	80.0	20.0	±0.2	–	40.0	80.0	120.0	40.0
inch	1.57	0.24	0.71	0.35	0.08	3.15	0.79	±0.2	–	1.57	3.15	4.72	1.57

Available standard materials [3]

Belt		Pin		Nominal belt pull, straight		Weight		Width deviation	Temperature		Certificates[2]
Material	Color	Material	Color	[N/mm]	[lb/ft]	[kg/m²]	[lb/ft²]	[%]	[°C]	[°F]	Flame retardant
POM	AT	PBT	UC	50	3426	17.5	3.58	-0.7	-45/90	-49/194	–
POM	AT	SS		60	4111	22.0	4.51	-0.7	-45/90	-49/194	–
Mold to order belts											
PP		PP	WT	30	2056	11.2	2.29	0.0	5/100	41/212	–
PP		SS		30	2056	14.1	2.89	0.0	5/100	41/212	–
PXX-HC	BK	PBT	UC	30	2056	12.3	2.52	-0.13	5/100	41/212	●
PXX-HC	BK	SS		30	2056	17.2	3.52	-0.13	5/100	41/212	●

AT (Anthracite), BK (Black), UC (Uncolored), WT (White)

All measurements and tolerances apply at 21 °C; for temperature deviations please see Prolink manual chapter 4.4 "Temperature influence".
All imperial dimensions (inches) are rounded off.

[1] Flex radii: r1 = side flex, r2 = front flex on roller, r3 = back flex on load bearing roller, r4 = back flex on Hold Down shoe, r5 = back flex on roller

[2] Complies with DIN EN 13501-1 Cfl-s1 (and DIN 4102 B1)

● = available | – = not available | empty cells = not tested

[3] More materials and colors on request

Forbo
MOVEMENT SYSTEMS

SERIES 7 | **BELT TYPES**

siegling prolink
modular belts

Straight running belt | Pitch 40 mm (1.57 in)

S7-0 FRT1 | 0 % Opening | Friction top (Design 1)

Closed surface | Friction top version with replaceable rubber pads provides increased grip

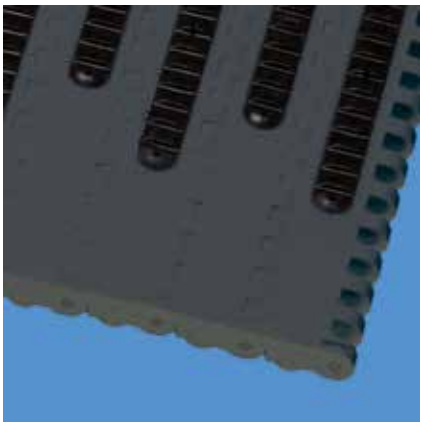

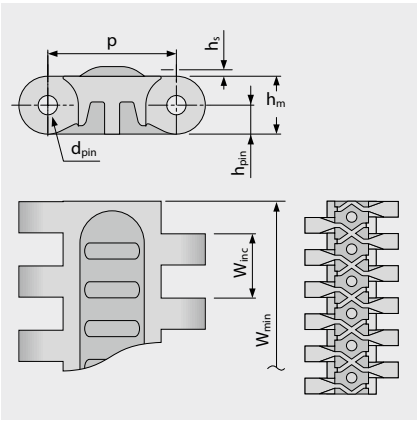

Variant specific dimensions [mm (in)]

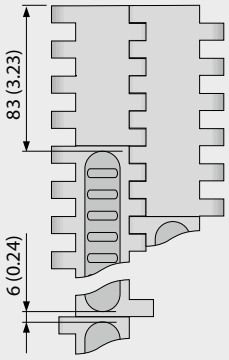

Belt dimensions

	p	d_{pin}	h_m	h_{pin}	h_s	W_{min}	W_{inc}	W_{tol}	Minimum flex radii[1]				
	Pitch	Pin Ø	Thickness	Pin position	Height	Width min.	Width Increment	Width tolerance [%]	r1 C_c x W_B	r2	r3	r4	r5
mm	40.0	6.0	18.0	9.0	3.0	360.0	200.0	±0.2	–	40.0	80.0	120.0	40.0
inch	1.57	0.24	0.71	0.35	0.12	14.17	7.87	±0.2	–	1.57	3.15	4.72	1.57

Mold to order belts [3]

Belt		Pin		Rubber		Nominal belt pull, straight		Weight		Width deviation	Temperature		Certificates[2]
Material	Color	Material	Color	Material	Color	[N/mm]	[lb/ft]	[kg/m²]	[lb/ft²]	[%]	[°C]	[°F]	Flame retardant
PE		PE	UC	R2	BK	18	1233	13.0	2.66	-0.35	-70/65	-94/149	–
POM	AT	PBT	UC	R2	BK	50	3426	19.0	3.89	-0.75	-45/90	-49/194	–
POM	AT	SS		R2	BK	60	4111	23.5	4.81	-0.75	-45/90	-49/194	–
PP		PP	WT	R2	BK	30	2056	12.4	2.54	0.0	5/100	41/212	–
PP		SS		R2	BK	30	2056	17.3	3.54	0.0	5/100	41/212	–

■ AT (Anthracite), ■ BK (Black), □ UC (Uncolored), □ WT (White)

All measurements and tolerances apply at 21 °C; for temperature deviations please see Prolink manual chapter 4.4 "Temperature influence".
All imperial dimensions (inches) are rounded off.

[1] Flex radii: r1 = side flex, r2 = front flex on roller, r3 = back flex on load bearing roller, r4 = back flex on Hold Down shoe, r5 = back flex on roller

[2] Complies with DIN EN 13501-1 Cfl-s1 (and DIN 4102 B1)

● = available | – = not available | empty cells = not tested

[3] More materials and colors on request

Forbo
MOVEMENT SYSTEMS

S7 SPR | Sprockets

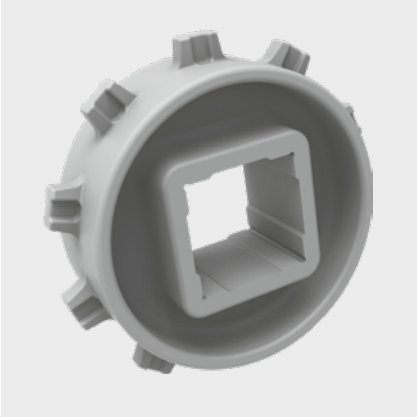

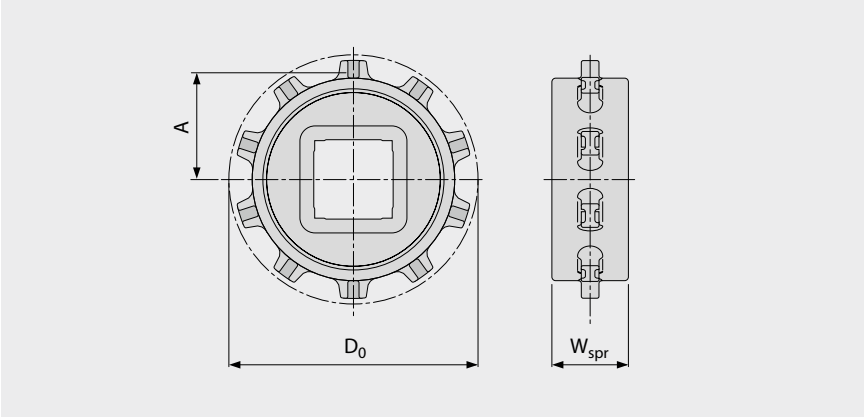

Main dimensions

Sprocket size (Number of teeth)		Z10	Z16 V2	Z20 V2
W_{spr}	mm	39.0	39.0	39.0
	inch	1.54	1.54	1.54
D_0	mm	129.7	204.8	255.1
	inch	5.11	8.06	10.04
A_{max}	mm	55.9	93.5	118.6
	inch	2.20	3.68	4.67
A_{min}	mm	53.2	91.5	117.1
	inch	2.09	3.60	4.61

Shaft bores (● = Round, ■ = Square; ❍ or ❑ = mold to order)

40	mm	■		
60	mm		■	■
80	mm		■	❑
90	mm			■
1.5	inch	■		
2.5	inch		■	❑
3.5	inch			❑

Material: PA, Color: LG

LG (Light gray)

All measurements and tolerances apply at 21 °C.
All imperial dimensions (inches) are rounded off.
For detailed sprocket and shaft dimensions see appendix 6.3
Number of sprockets (sprocket spacing distance) see chapter 3.2

SERIES 7 | **WHEELSTOPPER**

siegling prolink
modular belts

Straight running belt | Pitch 40 mm (1.57 in)

S7-0 FLT WSC | Wheelstopper

Stiff and strong profiles (interrupted for finger plates)



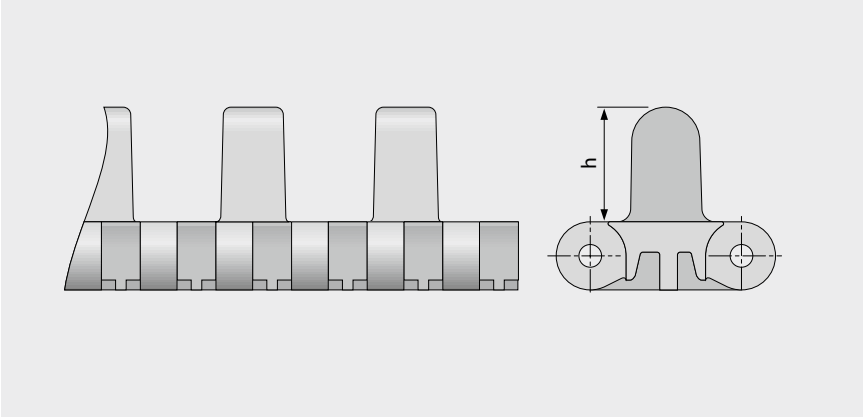

Basic data

Material	Color	Height (h)
		30 mm 1.2 inch
POM	DB	●

Molded width: 160 mm (6.3 in)

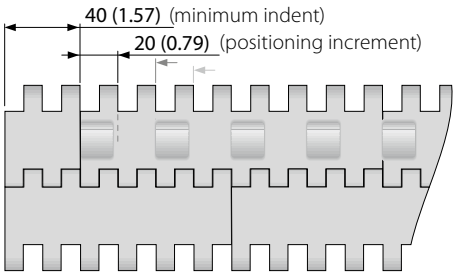

Configuration S7-0 FLT WSC

DB (Dark blue)

All measurements and tolerances apply at 21 °C; for temperature deviations please see Prolink manual chapter 4.4 "Temperature influence".
All imperial dimensions (inches) are rounded off.
Note: Use of accessory in a belt may impact on the minimum design radii. Please see chapter 6.3 for further information.

Forbo
MOVEMENT SYSTEMS

S7-0 NCL WSS I20 | Wheelstopper

Smalll and stiff profiles (interrupted for finger plates)



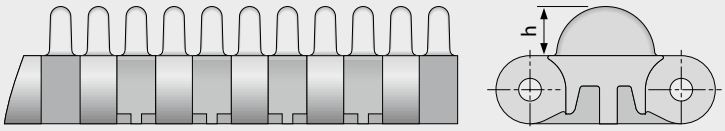

Basic data

Material	Color	Height (h)
		13 mm 0.5 inch
POM	YL	●

Molded width: 80 mm (3.2 in), 120 mm (4.7 in)

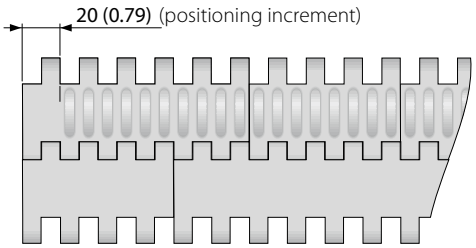

Configuration S7-0 NCL WSS I20

YL (Yellow)

All measurements and tolerances apply at 21 °C; for temperature deviations please see Prolink manual chapter 4.4 “Temperature influence“.
All imperial dimensions (inches) are rounded off.
Note: Use of accessory in a belt may impact on the minimum design radii. Please see chapter 6.3 for further information.

SERIES 7 | **PRR**

Straight running belt | Pitch 40 mm (1.57 in)

siegling prolink
modular belts

S7 PRR | Pin Retained Rollers

For applications where low back pressure accumulation or product separation is required

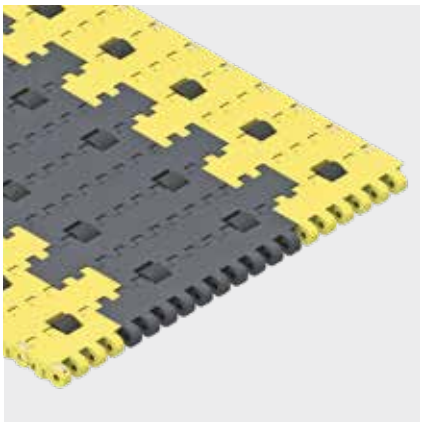

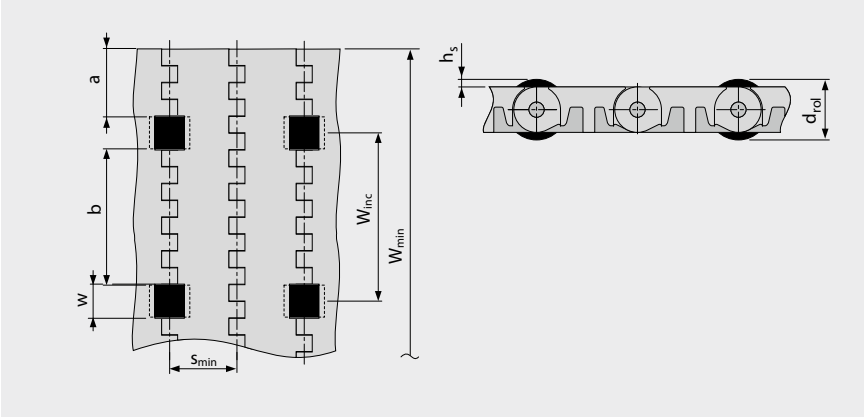

- For low back pressure wearstrips are to be positioned between the rollers
- For product separation the wear-strips are to be positioned below the rollers
- For all materials and surfaces
- Rollers available in POM BK

Dimensions

w	20 mm (0.79 in)	Roller cut out width (roller width 19 mm (0.75 in))
h_s	3.5 mm (0.14 in)	Height of rollers above surface
d_{rol}	25 mm (0.98 in)	Roller diameter
a	40 mm (1.6 in)	Minimum indent
b	80 mm (3.15 in)	Standard distance between rollers across belt width
s	n x s_{min}	Roller spacing in travel direction (standard: n = 2)
s_{min}	40 mm (1.6 in)	Min. roller spacing in travel direction
W_{inc}	100 mm (3.9 in)	Width increment
W_{min}	200 mm (7.9 in)	Min. belt width
W_B		Belt width
n_{rol}		Number of rollers across belt width

Allowable belt pull

To determine admissible belt pull calculate effective belt width $W_{B,ef}$ by

$W_{B,ef} = W_B - (w \times n_{rol})$

Example: W_B = 400 mm (15.75 in); w = 20 mm (0.79 in); n_{rol} = 4

$W_{B,ef} = 400 - (20 \times 4) = 320$ mm

$W_{B,ef} = 15.75 - (0.79 \times 4) = 12.6$ in

Note: Sprocket must not be placed inline with rollers. Deviation in roller spacing possible, please get in contact to customer service. Coefficient of friction between belt and conveyed product in accumulation mode μ_{acc} = 0.04, I.e. the accumulation pressure is approx. 4 % of the weight of the backed up product.

All measurements and tolerances apply at 21 °C; for temperature deviations please see Prolink manual chapter 4.4 "Temperature influence".
All imperial dimensions (inches) are rounded off.
Note: Use of accessory in a belt may impact on the minimum design radii. Please see chapter 6.3 for further information.

Forbo
MOVEMENT SYSTEMS

LEGEND

① Series
S1 … S19

② Open area/Sprocket size
Percentage open area Format: xx E.g. 20 = 20 %
For sprockets: number of teeth Format: "Z"xx E.g. Z12 = 12 teeth

③ Surface pattern	
BSL	Base module for slider
CTP	Cone top
CUT	Curved top
FLT	Flat top (smooth)
FRT-OG	Friction top without High Grip insert
FRT(X)	Friction top (Design X)
GRT	Grid top
HDK	High Deck
LRB	Lateral rib
MOD	Modified module shape
NCL	No cling
NPY	Negative pyramid
NSK	Non skid
NSK2	Non skid, nonwoven variant
NTP	Nub top (round studs)
PRR	Pin Retained Rollers
RAT	Radius top
RRB	Raised rib
RSA	Reduced surface area
RTP	Roller top
SRS	Slip-resistant surface

④ Type	
BPU	Bucket profile
CAP	Pin lock & belt edge sealing
CCW	Counter clockwise
CLP	Clip
CM	Center module
CW	Clockwise
FPL	Finger plate
HDT	Hold Down Tab
IDL	Idler
INS	Insert
PIN	Coupling rod
PMC	Profile module center
PMU	Profile module universal
PSP	ProSnap
PSU-0	Prof. scoop uni. closed
PSU-X	Prof. scoop uni. x% open
RI	High Grip insert
REL	Reinforcement Link (SS)
ROL	Rollers
RTR	Retaining ring
SG	Module with sideguard
SGL	Side guard, left
SGR	Side guard, right
SLI	Slider
SMA	Side module, A side
SMB	Side module, B side
SML	Side module, left
SMR	Side module, right
SMT	Side module, tight radius
SMU	Side module, universal/both sides
SPR	Sprocket
SPR-SP	Split sprocket, 2-part
SSL	Self stacker side module, left
SSR	Self stacker side module, right
TPL	Turning panel, left
TPR	Turning panel, right
UM	Universal module
WSC	Wheel Stopper Center
WSS	Wheel Stopper Side

⑤ Style	
1.6	1.6 collapse factor
1.7	1.7 collapse factor
2.2	2.2 collapse factor
2.2 G	2.2 collapse factor, guided
A90	Angle 90° to conveying direction
BT	Bearing tab
DR	Double row sprocket
F1, F2, F3 …	Collapse factor modules
G	Guided
GT	Guiding tabs
HD	Hold Down
HR	Hard removable pin
Ixx	xx = indent in mm
RG	Reversed guided
SG	Side guard
SP	Split sprocket
ST	Strong
V2	Version 2 indicates a design update

⑥ Material	
PA	Polyamide
PA-FR	Polyamide flame retadant
PA-FRHC	Polyamide, flame retadant, high conductive
PA-HT	Polyamide high temperature
PBT	Polybutylenterephthalate
PE	Polyethylene
PE-I	PE impact resistant
PE-MD	PE metal detectable
PK	Wear & impact improved polymer
PLX	Special PK for pins with small diameter – higher stiffness
POM	Polyoxymethylene (Polyacetal)
POM-CR	POM cut resistant
POM-HC	POM highly conductive
POM-MD	POM metal detectable
POM-PE	POM side modules + PE center modules
POM-PP	POM side modules + PP center modules
PP	Polypropylene
PP-MD	PP metal detectable
PP-SW	PP steam and hot water resistant
PXX-HC	Self-extinguishing highly conductive material
R1	TPE 80 Shore A, PP
R2	EPDM 80 Shore A, vulcanized
R3	TPE 70 Shore A, POM
R4	TPE 86 Shore A, PP
R5	TPE 52 Shore A, PP
R6	TPE 63 Shore A, POM
R7	TPE 50 Shore A, PP
R8	TPE 55 Shore A, PE
R11	TPE 50 Shore A, POM
SER	Self-extinguishing TPE
SS	Stainless steel
SSS	Stainless steel acid resistant
TPC1	Themoplastic Copolyester
-HA	Supports the HACCP concept
HW	High Wear resistant material

⑦ Color*	
AT	Anthracite
BG	Beige
BK	Black
BL	Blue
DB	Dark blue
GN	Green
LB	Light blue
LG	Light gray
OR	Orange
RE	Red
TQ	Turquoise
UC	Uncolored
WT	White
YL	Yellow

⑧ Height/Diameter/ Bore size and style
Height in mm (in) Format: Hxxx Pin diameter in mm (in) Format: Dxxx
Bore size: SQ (= square) or RD (= round) either in mm or inches Format: SQxxMM or RDxxIN

⑨ Length/Width
Pins Length in mm (in) Format: Lxxx Module width in mm (in) Format: Wxxx REL in mm one decimal Format: Wx.x

* For each series' standard colors please refer to the table of materials for each belt (chapter 1.2). A number of other colors are available on request. Colors can vary from the original due to the print, production processes or material used.