# EXCERPT FROM PROLINK ENGINEERING MANUAL

05/26 (Ref-No. 888)

**siegling prolink**
modular belts

## SERIES 10

Straight running belts
Pitch 25.4 mm (1 in)

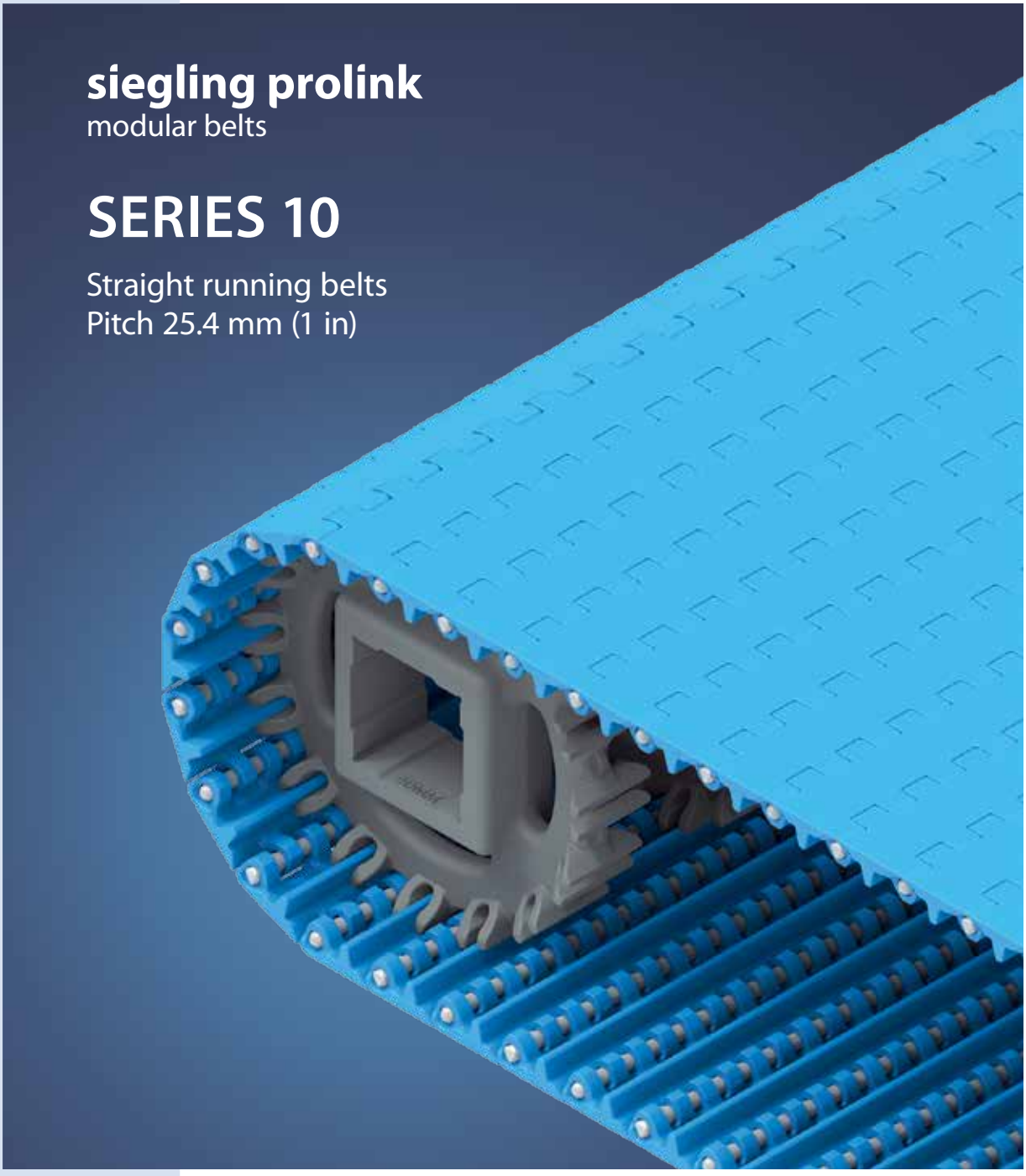

**Forbo Siegling GmbH**
Lilienthalstraße 6/8, D-30179 Hannover
Telefon +49 511 6704 0
www.forbo-siegling.com, siegling@forbo.com

Ref. no. 888-1_1.2_S10

# SERIES 10 | **OVERVIEW**

Straight running belts | Pitch 25.4 mm (1 in)

siegling prolink
modular belts

## Belts for light to medium-duty hygiene-critical applications

**Side view scale 1:1**

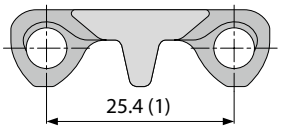


**Design characteristics**

- Small number of eyelets ensures easy cleaning
- Hinges that open wide, combined with smooth, flat channels on the underside and a continuous drive bar produce an easy-to-clean design
- Robust design guarantees superior durability
- Optimal design of sprocket teeth and tracking fins provides superior sprocket engagement, safe belt tracking and an easy-to-clean sprocket

**Basic data**

| | |
|---|---|
| Pitch | 25.4 mm (1 in) |
| Belt width min. | 38.1 mm (1.5 in) |
| Width increments | 19.05 mm (0.75 in) |
| Hinge pins | 5 mm (0.2 in) made of plastic (PBT, PP, PE, PP-MD, POM-MD). One-piece up to a belt width of 1200 mm (47 in). |

**Available surface pattern and opening area**

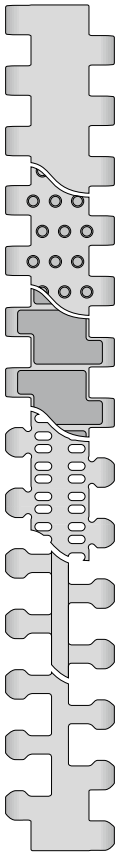

S10-0 FLT
Closed, smooth surface

S10-0 NTP
Closed surface with round studs

S10-0 FRT1
Closed surface with friction top

S10-22 FLT
Open (22 %), smooth surface

S10-36 LRB
Open (36 %) surface and lateral ribbing

S10-36 FLT
Open (36 %), smooth surface

NSF Certified

NSF-compliant from these certified Forbo plants:
Huntersville (USA), Malacky (Slovakia), Tlalnepantla (Mexico)

**Sprockets**
in different sizes with round or square bore

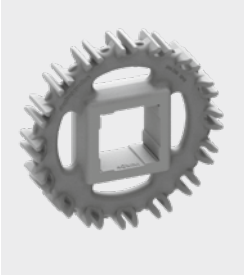

**Profiles**
in different heights and designs for inclines

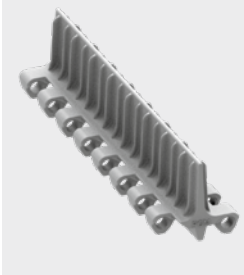

**Side guards**
in different heights for retention of bulk products

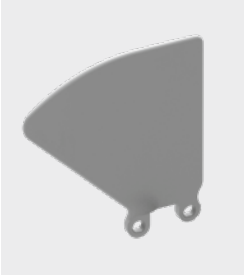

**Hold Down Tabs**
Hold Down Tabs for additional guiding



**ProSnap**
Quick-Release for easy opening and closing of the belt



# SERIES 10 | **BELT TYPES**

siegling prolink
modular belts

Straight running belt | Pitch 25.4 mm (1 in)

## **S10-0 FLT** | 0 % Opening | Flat top

Closed, smooth surface | Flat top surface

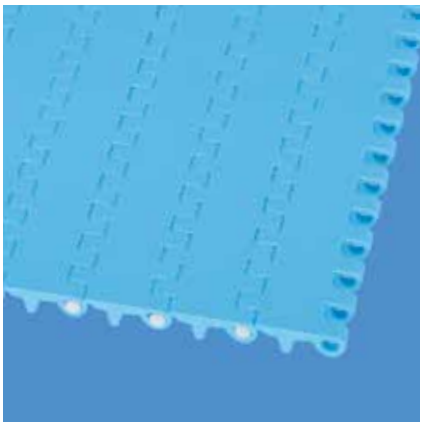

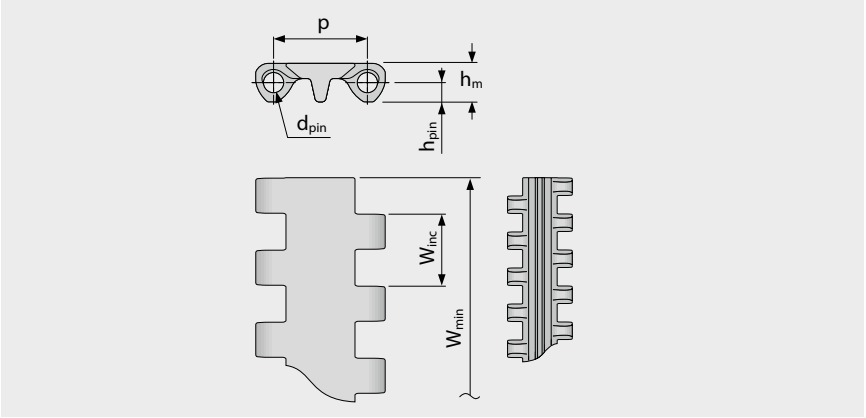


### Belt dimensions

| | p | $d_{pin}$ | $h_m$ | $h_{pin}$ | $h_s$ | $W_{min}$ | $W_{inc}$ | $W_{tol}$ | Minimum flex radii[1] | | | | |
|---|---|---|---|---|---|---|---|---|---|---|---|---|---|
| | Pitch | Pin Ø | Thickness | Pin position | Height | Width min. | Width Increment | Width tolerance [%] | r1 $C_c$ x $W_B$ | r2 | r3 | r4 | r5 |
| mm | 25.4 | 5.0 | 10.2 | 5.1 | 0.0 | 38.1 | 19.1 | ±0.2 | – | 25.4 | 50.8 | 76.2 | 25.4 |
| inch | 1.0 | 0.2 | 0.4 | 0.2 | 0.0 | 1.5 | 0.75 | ±0.2 | – | 1.0 | 2.0 | 3.0 | 1.0 |

### Available standard materials [3]

| Belt | | Pin | | Nominal belt pull, straight | | Weight | | Width deviation | Temperature | | Certificates[2] | | |
|---|---|---|---|---|---|---|---|---|---|---|---|---|---|
| Material | Color | Material | Color | [N/mm] | [lb/ft] | [kg/m²] | [lb/ft²] | [%] | [°C] | [°F] | FDA | EU | MHLW |
| PE | WT/LB | PE | WT | 6 | 411 | 5.4 | 1.11 | 0.0 | -70/65 | -94/149 | ● | ● | ● |
| POM | WT/LB | PBT | UC | 20 | 1370 | 8.0 | 1.64 | 0.0 | -45/90 | -49/194 | ● | ● | ● |
| POM-MD | BL | POM-MD | BL | 20 | 1370 | 8.3 | 1.7 | 0.0 | -45/90 | -49/194 | ● | ● | ● |
| PP | WT/LB | PP | WT | 8 | 548 | 5.1 | 1.04 | 0.26 | 5/100 | 41/212 | ● | ● | ● |
| PP-MD | BL | PP-MD | BL | 8 | 548 | 5.3 | 1.09 | 0.26 | 5/100 | 41/212 | ● | ● | ● |
| Mold to order belts | | | | | | | | | | | | | |
| PA* | BL | PBT | UC | 17 | 1165 | 6.7 | 1.37 | 0.74 | -40/120 | -40/248 | ● | ● | ● |
| PE-MD | BL | POM-MD | BL | 6 | 411 | 5.9 | 1.21 | 0.0 | -70/65 | -94/149 | ● | ● | ● |
| PP-SW | BL | PP-SW | BL | 6 | 411 | 5.1 | 1.04 | 0.26 | 5/100 | 41/212 | ● | ● | ● |
| TPC1 | LB | PBT | UC | 6 | 411 | 7.1 | 1.45 | -0.13 | -25/80 | -13/176 | ● | ● | ● |

Mold to width available in: 76 mm (3.0 in), 152 mm (6.0 in), 229 mm (9.0 in)

* Values valid for dry applications (RH <50 %). Belts in PA material will absorb water in wet environments, causing them to expand and reduce the nominal belt pull capacity.

BL (Blue), LB (Light blue), UC (Uncolored), WT (White)

All measurements and tolerances apply at 21 °C; for temperature deviations please see Prolink manual chapter 4.4 "Temperature influence".
All imperial dimensions (inches) are rounded off.

[1] Flex radii: r1 = side flex, r2 = front flex on roller, r3 = back flex on load bearing roller, r4 = back flex on Hold Down shoe, r5 = back flex on roller

[2] Complies with FDA 21 CFR | Complies with (EU) 10/2011 and (EC) 1935/2004 regulations regarding the raw materials used and the migration thresholds | Complies with Japanese MHLW Notification 370
● = available | – = not available | empty cells = not tested

[3] More materials and colors on request

forbo
MOVEMENT SYSTEMS

# SERIES 10 | **BELT TYPES**

siegling prolink
modular belts

Straight running belt | Pitch 25.4 mm (1 in)

## **S10-0 NTP** | 0 % Opening | Nub top (round studs)

Closed surface with round studs 9 % contact area | Version available without round studs at the side (38 mm indent)

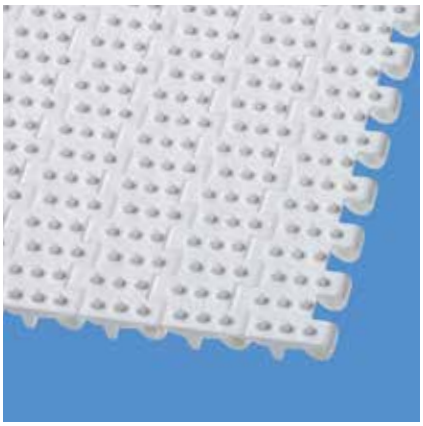

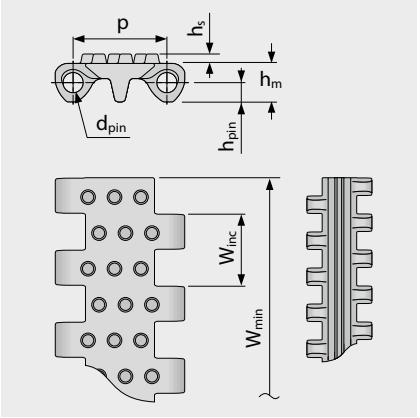


Variant specific dimensions [mm (in)]

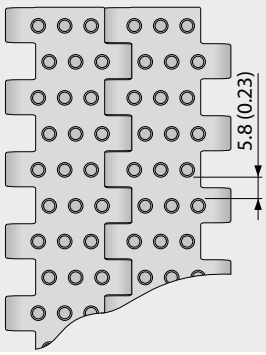


### Belt dimensions

| | p | $d_{pin}$ | $h_m$ | $h_{pin}$ | $h_s$ | $W_{min}$ | $W_{inc}$ | $W_{tol}$ | Minimum flex radii[1] | | | | |
|---|---|---|---|---|---|---|---|---|---|---|---|---|---|
| | Pitch | Pin Ø | Thickness | Pin position | Height | Width min. | Width Increment | Width tolerance [%] | r1 $C_c$ x $W_B$ | r2 | r3 | r4 | r5 |
| mm | 25.4 | 5.0 | 10.2 | 5.1 | 2.5 | 38.1 | 19.1 | ±0.2 | – | 25.4 | 50.8 | 76.2 | 25.4 |
| inch | 1.0 | 0.2 | 0.4 | 0.2 | 0.1 | 1.5 | 0.75 | ±0.2 | – | 1.0 | 2.0 | 3.0 | 1.0 |

### Available standard materials [3]

| Belt | | Pin | | Nominal belt pull, straight | | Weight | | Width deviation | Temperature | | Certificates[2] | | |
|---|---|---|---|---|---|---|---|---|---|---|---|---|---|
| Material | Color | Material | Color | [N/mm] | [lb/ft] | [kg/m²] | [lb/ft²] | [%] | [°C] | [°F] | FDA | EU | MHLW |
| PE | WT | PE | WT | 6 | 411 | 5.5 | 1.13 | 0.0 | -70/65 | -94/149 | ● | ● | ● |
| PE | LB | PE | WT | 6 | 411 | 5.5 | 1.13 | 0.0 | -70/65 | -94/149 | ● | ● | ● |
| POM | WT/LB | PBT | UC | 20 | 1370 | 8.2 | 1.68 | 0.0 | -45/90 | -49/194 | ● | ● | ● |
| PP | WT/LB | PP | WT | 8 | 548 | 5.1 | 1.04 | 0.26 | 5/100 | 41/212 | ● | ● | ● |
| PP-MD | BL | PP-MD | BL | 8 | 548 | 5.4 | 1.11 | 0.26 | 5/100 | 41/212 | ● | ● | ● |
| Mold to order belts | | | | | | | | | | | | | |
| PE-MD | BL | POM-MD | BL | 6 | 411 | 6.5 | 1.33 | 0.0 | -70/65 | -94/149 | ● | ● | ● |

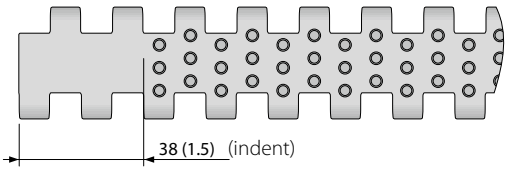


Also available with molded indent 38 mm (1.5 in)

Mold to width available in: 229 mm (9.0 in)

BL (Blue), LB (Light blue), UC (Uncolored), WT (White)

All measurements and tolerances apply at 21 °C; for temperature deviations please see Prolink manual chapter 4.4 "Temperature influence".
All imperial dimensions (inches) are rounded off.

[1] Flex radii: r1 = side flex, r2 = front flex on roller, r3 = back flex on load bearing roller, r4 = back flex on Hold Down shoe, r5 = back flex on roller

[2] Complies with FDA 21 CFR | Complies with (EU) 10/2011 and (EC) 1935/2004 regulations regarding the raw materials used and the migration thresholds | Complies with Japanese MHLW Notification 370

● = available | – = not available | empty cells = not tested

[3] More materials and colors on request

Forbo
MOVEMENT SYSTEMS

# SERIES 10 | **BELT TYPES**

siegling prolink
modular belts

Straight running belt | Pitch 25.4 mm (1 in)

## **S10-0 FRT1** | 0 % Opening | Friction top (Design 1)

Closed surface with flat integrated friction pads (FRT1) for high grip | 67 % contact area | Version available without FRT1 structure at the side (38 mm indent)

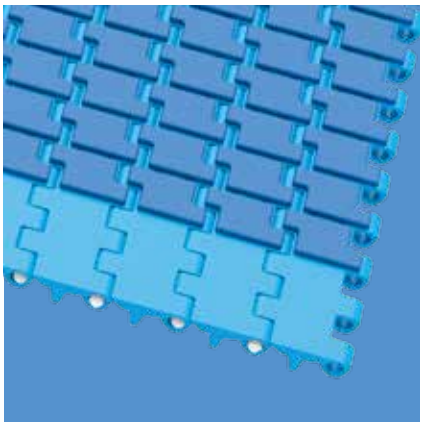

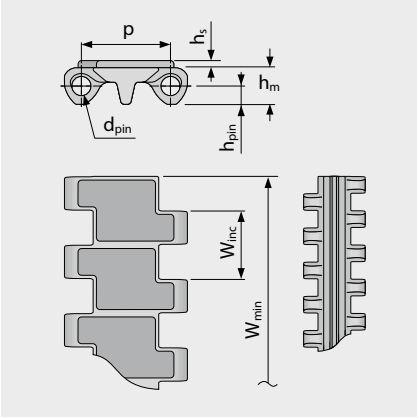


Variant specific dimensions [mm (in)]

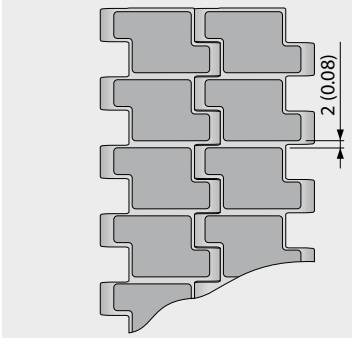


### Belt dimensions

| | p | $d_{pin}$ | $h_m$ | $h_{pin}$ | $h_s$ | $W_{min}$ | $W_{inc}$ | $W_{tol}$ | Minimum flex radii[1] | | | | |
|---|---|---|---|---|---|---|---|---|---|---|---|---|---|
| | Pitch | Pin Ø | Thickness | Pin position | Height | Width min. | Width Increment | Width tolerance [%] | r1 $C_c$ x $W_B$ | r2 | r3 | r4 | r5 |
| mm | 25.4 | 5.0 | 10.2 | 5.1 | 2.0 | 38.1 | 19.1 | ±0.2 | – | 25.4 | 50.8 | 76.2 | 25.4 |
| inch | 1.0 | 0.2 | 0.4 | 0.2 | 0.08 | 1.5 | 0.75 | ±0.2 | – | 1.0 | 2.0 | 3.0 | 1.0 |

### Available standard materials [3]

| Belt | | Pin | | Rubber | | Nominal belt pull, straight | | Weight | | Width deviation | Temperature | | Certificates[2] | | |
|---|---|---|---|---|---|---|---|---|---|---|---|---|---|---|---|
| Material | Color | Material | Color | Material | Color | [N/mm] | [lb/ft] | [kg/m²] | [lb/ft²] | [%] | [°C] | [°F] | FDA | EU | MHLW |
| PP | WT | PP | WT | R7 | BG | 8 | 548 | 6.3 | 1.29 | 0.26 | 5/100 | 41/212 | ● | ● | |
| PP | LB | PP | WT | R7 | BK | 8 | 548 | 6.3 | 1.29 | 0.26 | 5/100 | 41/212 | ● | ● | |
| PP | LB | PP | WT | R7 | BL | 8 | 548 | 6.3 | 1.29 | 0.26 | 5/100 | 41/212 | ● | ● | |

Mold to width available in: 229 mm (9.0 in)

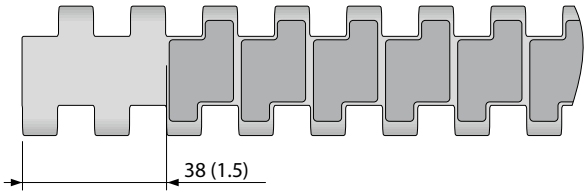


Also available with molded indent 38 mm (1.5 in)

BG (Beige), BL (Blue), BK (Black), LB (Light blue), WT (White)

All measurements and tolerances apply at 21 °C; for temperature deviations please see Prolink manual chapter 4.4 "Temperature influence".
All imperial dimensions (inches) are rounded off.

[1] Flex radii: r1 = side flex, r2 = front flex on roller, r3 = back flex on load bearing roller, r4 = back flex on Hold Down shoe, r5 = back flex on roller

[2] Complies with FDA 21 CFR | Complies with (EU) 10/2011 and (EC) 1935/2004 regulations regarding the raw materials used and the migration thresholds | Complies with Japanese MHLW Notification 370

● = available | – = not available | empty cells = not tested

[3] More materials and colors on request

Forbo
MOVEMENT SYSTEMS

# SERIES 10 | **BELT TYPES**

siegling prolink
modular belts

Straight running belt | Pitch 25.4 mm (1 in)

## **S10-22 FLT** | 22 % Opening | Flat top

Open area (22 %) for excellent air circulation and drainage | Smooth surface | 70 % contact area (Largest opening: 2.6 x 5.3 mm/0.10 x 0.21 in)

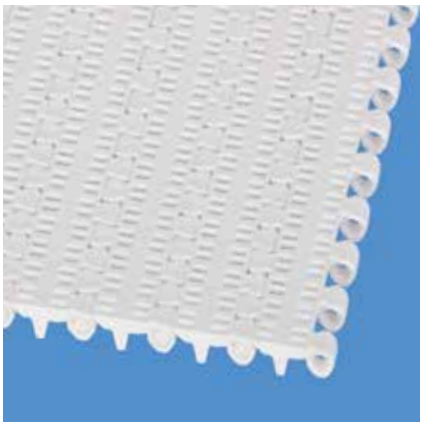

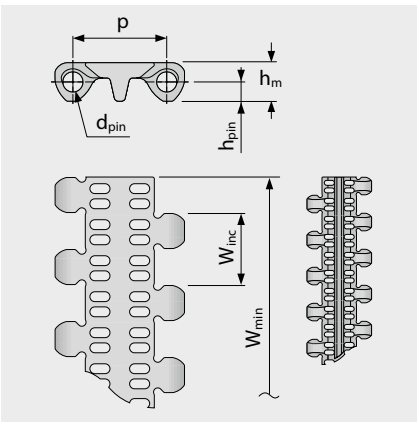


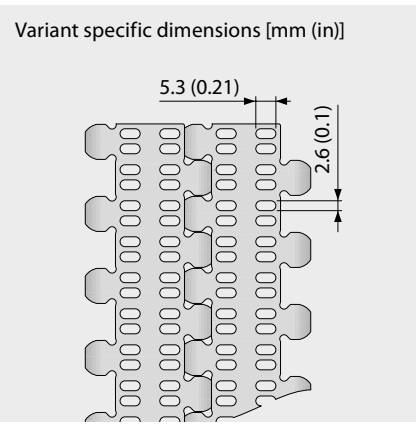


### Belt dimensions

| | p | $d_{pin}$ | $h_m$ | $h_{pin}$ | $h_s$ | $W_{min}$ | $W_{inc}$ | $W_{tol}$ | Minimum flex radii[1] | | | | |
|---|---|---|---|---|---|---|---|---|---|---|---|---|---|
| | Pitch | Pin Ø | Thickness | Pin position | Height | Width min. | Width Increment | Width tolerance [%] | r1 $C_c$ x $W_B$ | r2 | r3 | r4 | r5 |
| mm | 25.4 | 5.0 | 10.2 | 5.1 | 0.0 | 38.1 | 19.1 | ±0.2 | – | 25.4 | 50.8 | 76.2 | 25.4 |
| inch | 1.0 | 0.2 | 0.4 | 0.2 | 0.0 | 1.5 | 0.75 | ±0.2 | – | 1.0 | 2.0 | 3.0 | 1.0 |

### Available standard materials [3]

| Belt | | Pin | | Nominal belt pull, straight | | Weight | | Width deviation | Temperature | | Certificates[2] | | |
|---|---|---|---|---|---|---|---|---|---|---|---|---|---|
| Material | Color | Material | Color | [N/mm] | [lb/ft] | [kg/m²] | [lb/ft²] | [%] | [°C] | [°F] | FDA | EU | MHLW |
| PE | WT | PE | WT | 3 | 206 | 4.7 | 0.96 | 0.0 | -70/65 | -94/149 | ● | ● | ● |
| PE | LB | PE | WT | 3 | 206 | 4.7 | 0.96 | 0.0 | -70/65 | -94/149 | ● | ● | ● |
| POM | WT | PBT | UC | 11 | 754 | 6.7 | 1.37 | 0.0 | -45/90 | -49/194 | ● | ● | ● |
| POM | LB | PBT | UC | 11 | 754 | 6.7 | 1.37 | 0.0 | -45/90 | -49/194 | ● | ● | ● |
| PP | WT | PP | WT | 5 | 343 | 4.3 | 0.88 | 0.26 | 5/100 | 41/212 | ● | ● | ● |
| PP | LB | PP | WT | 5 | 343 | 4.3 | 0.88 | 0.26 | 5/100 | 41/212 | ● | ● | ● |
| PP-MD | BL | PP-MD | BL | 5 | 343 | 4.9 | 1.0 | 0.0 | 5/100 | 41/212 | ● | ● | ● |
| Mold to order belts | | | | | | | | | | | | | |
| PE-MD | BL | POM-MD | BL | 3 | 206 | 5.1 | 1.04 | 0.0 | -70/65 | -94/149 | ● | ● | ● |

Mold to width available in: 76 mm (3.0 in), 229 mm (9.0 in)

BL (Blue), LB (Light blue), UC (Uncolored), WT (White)

All measurements and tolerances apply at 21 °C; for temperature deviations please see Prolink manual chapter 4.4 "Temperature influence".
All imperial dimensions (inches) are rounded off.

[1] Flex radii: r1 = side flex, r2 = front flex on roller, r3 = back flex on load bearing roller, r4 = back flex on Hold Down shoe, r5 = back flex on roller

[2] Complies with FDA 21 CFR | Complies with (EU) 10/2011 and (EC) 1935/2004 regulations regarding the raw materials used and the migration thresholds | Complies with Japanese MHLW Notification 370
● = available | – = not available | empty cells = not tested

[3] More materials and colors on request

Forbo
MOVEMENT SYSTEMS

# SERIES 10 | **BELT TYPES**

siegling prolink
modular belts

Straight running belt | Pitch 25.4 mm (1 in)

## **S10-36 LRB** | 36 % Opening | Lateral rib

Open area (36 %) for excellent air circulation and drainage | Lateral ribbing 12 % contact area (Largest opening: Ø = 5.9 mm/0.23 in) | Open area lateral rib version for small inclines and gentle conveying of delicate products

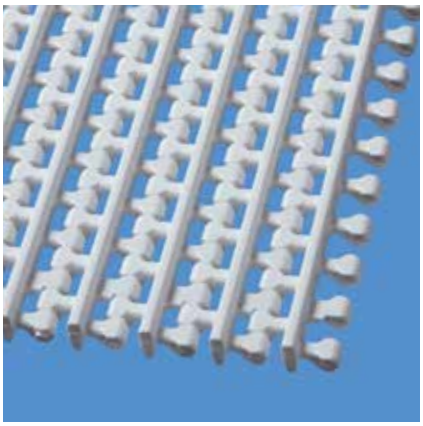

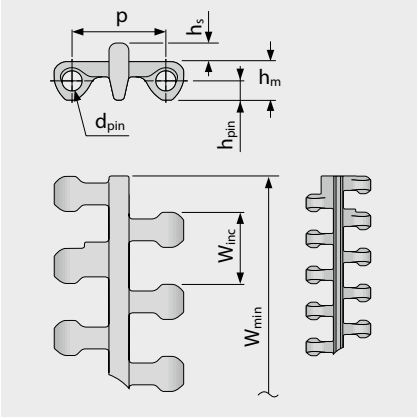


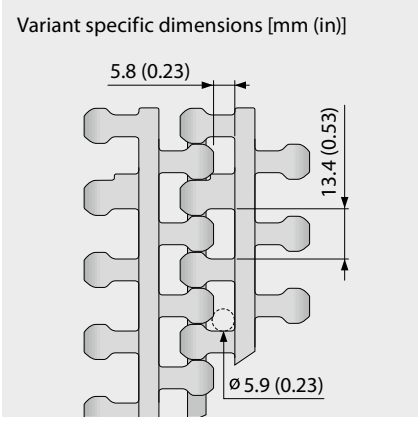


### Belt dimensions

| | p | $d_{pin}$ | $h_m$ | $h_{pin}$ | $h_s$ | $W_{min}$ | $W_{inc}$ | $W_{tol}$ | Minimum flex radii[1] | | | | |
|---|---|---|---|---|---|---|---|---|---|---|---|---|---|
| | Pitch | Pin Ø | Thickness | Pin position | Height | Width min. | Width Increment | Width tolerance [%] | r1 $C_c$ x $W_B$ | r2 | r3 | r4 | r5 |
| mm | 25.4 | 5.0 | 10.2 | 5.1 | 4.9 | 38.1 | 19.1 | ±0.2 | – | 25.4 | 50.8 | 76.2 | 25.4 |
| inch | 1.0 | 0.2 | 0.4 | 0.2 | 0.19 | 1.5 | 0.75 | ±0.2 | – | 1.0 | 2.0 | 3.0 | 1.0 |

### Available standard materials [3]

| Belt | | Pin | | Nominal belt pull, straight | | Weight | | Width deviation | Temperature | | Certificates[2] | | |
|---|---|---|---|---|---|---|---|---|---|---|---|---|---|
| Material | Color | Material | Color | [N/mm] | [lb/ft] | [kg/m²] | [lb/ft²] | [%] | [°C] | [°F] | FDA | EU | MHLW |
| PE | WT | PE | WT | 4 | 274 | 5.8 | 1.19 | 0.0 | -70/65 | -94/149 | ● | ● | ● |
| PE | LB | PE | WT | 4 | 274 | 5.8 | 1.19 | 0.0 | -70/65 | -94/149 | ● | ● | ● |
| POM | LB | PBT | UC | 13 | 891 | 7.6 | 1.56 | 0.0 | -45/90 | -49/194 | ● | ● | ● |
| PP | WT | PP | WT | 6 | 411 | 4.9 | 1.0 | 0.26 | 5/100 | 41/212 | ● | ● | ● |
| PP | LB | PP | WT | 6 | 411 | 4.9 | 1.0 | 0.26 | 5/100 | 41/212 | ● | ● | ● |
| Mold to order belts | | | | | | | | | | | | | |
| POM | WT | PBT | UC | 13 | 891 | 7.6 | 1.56 | 0.0 | -45/90 | -49/194 | ● | ● | ● |

Mold to width available in: 229 mm (9.0 in)

LB (Light blue), UC (Uncolored), WT (White)

All measurements and tolerances apply at 21 °C; for temperature deviations please see Prolink manual chapter 4.4 "Temperature influence".
All imperial dimensions (inches) are rounded off.

[1] Flex radii: r1 = side flex, r2 = front flex on roller, r3 = back flex on load bearing roller, r4 = back flex on Hold Down shoe, r5 = back flex on roller

[2] Complies with FDA 21 CFR | Complies with (EU) 10/2011 and (EC) 1935/2004 regulations regarding the raw materials used and the migration thresholds | Complies with Japanese MHLW Notification 370

● = available | – = not available | empty cells = not tested

[3] More materials and colors on request

Forbo
MOVEMENT SYSTEMS

# SERIES 10 | **BELT TYPES**

siegling prolink
modular belts

Straight running belt | Pitch 25.4 mm (1 in)

## **S10-36 FLT** | 36 % Opening | Flat top

Open area (36 %) for excellent air circulation and drainage | Smooth surface | 44 % contact area (Largest opening: Ø = 5.9 mm/0.23 in)

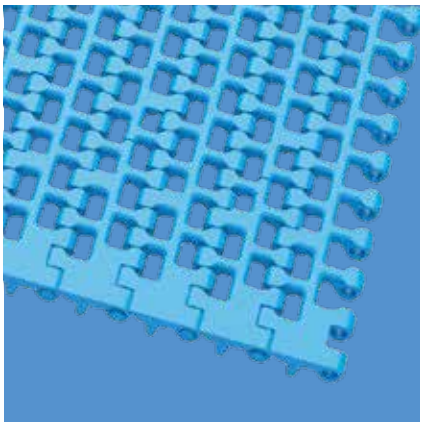

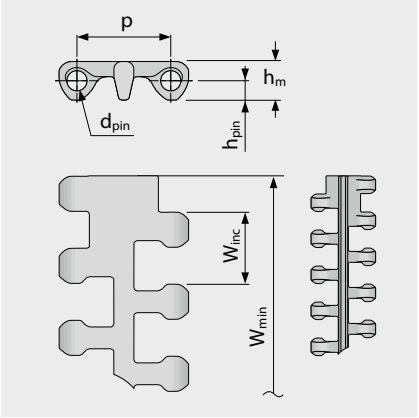


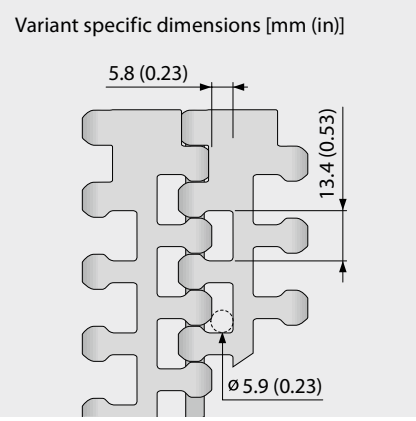


### Belt dimensions

| | p | $d_{pin}$ | $h_m$ | $h_{pin}$ | $h_s$ | $W_{min}$ | $W_{inc}$ | $W_{tol}$ | Minimum flex radii[1] | | | | |
|---|---|---|---|---|---|---|---|---|---|---|---|---|---|
| | Pitch | Pin Ø | Thickness | Pin position | Height | Width min. | Width Increment | Width tolerance [%] | r1 $C_c$ x $W_B$ | r2 | r3 | r4 | r5 |
| mm | 25.4 | 5.0 | 10.2 | 5.1 | 0.0 | 95.3 | 19.1 | ±0.2 | – | 25.4 | 50.8 | 76.2 | 25.4 |
| inch | 1.0 | 0.2 | 0.4 | 0.2 | 0.0 | 3.75 | 0.75 | ±0.2 | – | 1.0 | 2.0 | 3.0 | 1.0 |

### Available standard materials [3]

| Belt | | Pin | | Nominal belt pull, straight | | Weight | | Width deviation | Temperature | | Certificates[2] | | |
|---|---|---|---|---|---|---|---|---|---|---|---|---|---|
| Material | Color | Material | Color | [N/mm] | [lb/ft] | [kg/m²] | [lb/ft²] | [%] | [°C] | [°F] | FDA | EU | MHLW |
| PA* | BL | PBT | UC | 13 | 891 | 6.0 | 1.23 | 0.74 | -40/120 | -40/248 | ● | ● | ● |
| PE | WT/LB | PE | WT | 4 | 274 | 4.3 | 0.88 | 0.0 | -70/65 | -94/149 | ● | ● | ● |
| POM | WT/LB | PBT | UC | 13 | 891 | 6.2 | 1.27 | 0.0 | -45/90 | -49/194 | ● | ● | ● |
| PP | WT/LB | PP | WT | 6 | 411 | 4.0 | 0.82 | 0.26 | 5/100 | 41/212 | ● | ● | ● |
| PP-MD | BL | PP-MD | BL | 6 | 411 | 4.4 | 0.9 | 0.26 | 5/100 | 41/212 | ● | ● | ● |
| Mold to order belts | | | | | | | | | | | | | |
| POM-MD | BL | POM-MD | BL | 13 | 891 | 6.6 | 1.35 | 0.0 | -45/90 | -49/194 | ● | ● | ● |

* Values valid for dry applications (RH <50 %). Belts in PA material will absorb water in wet environments, causing them to expand and reduce the nominal belt pull capacity.

**Attention!** Due to the very large surface openings, personnel must be instructed not to place their fingers in or on this belt.

BL (Blue), LB (Light blue), UC (Uncolored), WT (White)

All measurements and tolerances apply at 21 °C; for temperature deviations please see Prolink manual chapter 4.4 "Temperature influence".
All imperial dimensions (inches) are rounded off.

[1] Flex radii: r1 = side flex, r2 = front flex on roller, r3 = back flex on load bearing roller, r4 = back flex on Hold Down shoe, r5 = back flex on roller

[2] Complies with FDA 21 CFR | Complies with (EU) 10/2011 and (EC) 1935/2004 regulations regarding the raw materials used and the migration thresholds | Complies with Japanese MHLW Notification 370
● = available | – = not available | empty cells = not tested

[3] More materials and colors on request

Forbo
MOVEMENT SYSTEMS

# SERIES 10 | **PROSNAP**

Straight running belt | Pitch 25.4 mm (1 in)

siegling prolink
modular belts

## **S10-0 FLT PSP** | ProSnap

Quick-Release for easy, quick and toolless opening and closing of the belt | One pin solution for entire belt width



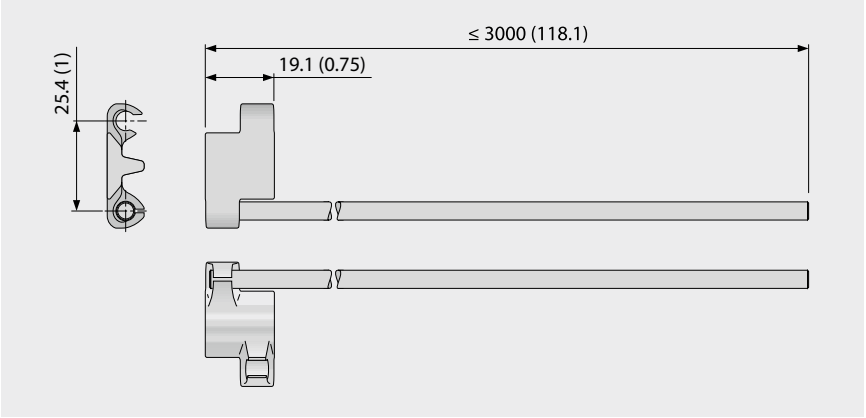


### Basic data

| Module | | Pin | |
|---|---|---|---|
| Material | Color | Material | Length [mm (in)] |
| POM | BL | SS | ≤ 3000 (118) |
| Mold to order | | | |
| POM-MD | BL | SS | ≤ 3000 (118) |

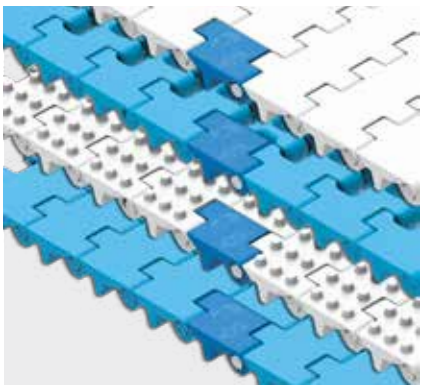

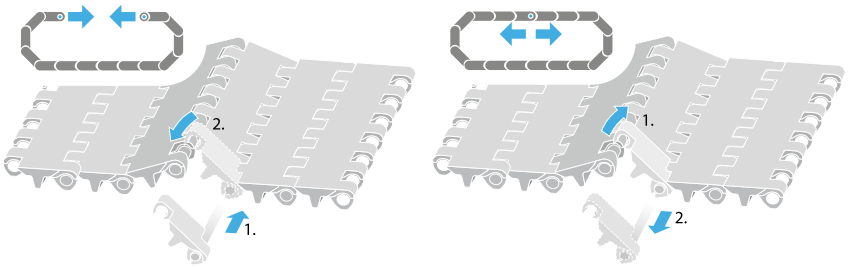


BL (Blue)

All measurements and tolerances apply at 21 °C; for temperature deviations please see Prolink manual chapter 4.4 "Temperature influence".
All imperial dimensions (inches) are rounded off.
Note: Use of accessory in a belt may impact on the minimum design radii. Please see chapter 6.3 for further information.

Forbo
MOVEMENT SYSTEMS

## **S10 SPR** | Sprockets

Optimal design of sprocket teeth and tracking fins provides superior sprocket engagement, safe belt tracking and an easy-to-clean sprocket

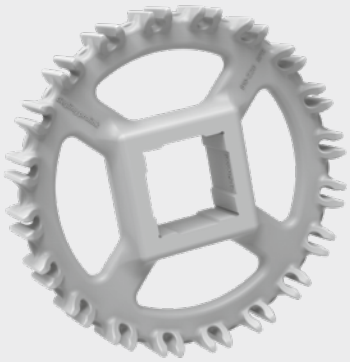

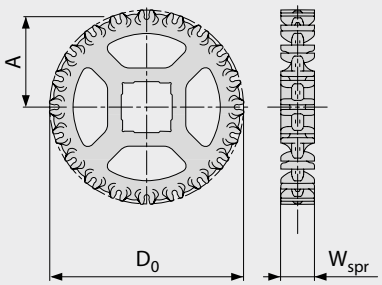


### Main dimensions

| Sprocket size (Number of teeth) | | Z6 | Z8 | Z10 | Z12 | Z15 | Z16 | Z18 | Z20 |
|---|---|---|---|---|---|---|---|---|---|
| $W_{spr}$ | mm | 28.0 | 28.0 | 28.0 | 28.0 | 28.0 | 28.0 | 28.0 | 28.0 |
| | inch | 1.10 | 1.10 | 1.10 | 1.10 | 1.10 | 1.10 | 1.10 | 1.10 |
| $D_0$ | mm | 51.4 | 66.8 | 82.4 | 98.2 | 122.4 | 130.4 | 146.4 | 162.5 |
| | inch | 2.02 | 2.63 | 3.24 | 3.87 | 4.82 | 5.13 | 5.76 | 6.40 |
| $A_{max}$ | mm | 19.8 | 27.9 | 35.9 | 43.9 | 56.0 | 60.0 | 68.1 | 76.1 |
| | inch | 0.78 | 1.10 | 1.41 | 1.73 | 2.20 | 2.36 | 2.68 | 3.00 |
| $A_{min}$ | mm | 17.2 | 25.8 | 34.1 | 42.4 | 54.8 | 58.9 | 67.0 | 75.2 |
| | inch | 0.68 | 1.02 | 1.34 | 1.67 | 2.16 | 2.32 | 2.64 | 2.96 |

**Shaft bores** (● = Round, ■ = Square; ❍ or ❑ = mold to order)

| | | | | | | | | | |
|---|---|---|---|---|---|---|---|---|---|
| 25 | mm | ● | ● / ■ | ■ | | | | | |
| 30 | mm | | | ● | ● | ● | ● | ● | ● |
| 40 | mm | | | ❍ / ■ | ● / ■ | ❍ / ■ | ■ | ■ | ❍ / ■ |
| 60 | mm | | | | | | | | ■ |
| 1 | inch | ● | ● / ■ | ● / ■ | ● | ● | ● | ● | ● |
| 1.25 | inch | | | ● | ● | ● | ● | ● | ● |
| 1.44 | inch | | | | ● | ❍ | | | ● |
| 1.5 | inch | | | ■ | ■ | ■ | ■ | ■ | ■ |
| 2.5 | inch | | | | | | | | ■ |

Material: PA, Color: LG

LG (Light gray)

All measurements and tolerances apply at 21 °C.
All imperial dimensions (inches) are rounded off.
For detailed sprocket and shaft dimensions see appendix 6.3
Number of sprockets (sprocket spacing distance) see chapter 3.2

## S10-0 FLT PMU/S10-0 FLT PMU I38

Flat top surface for dry products

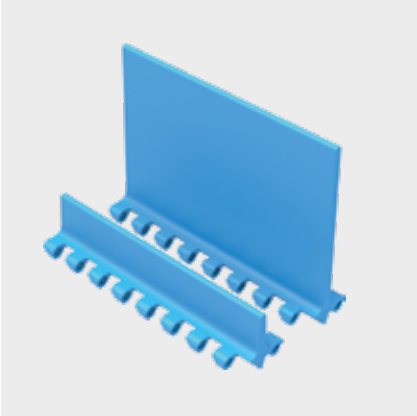

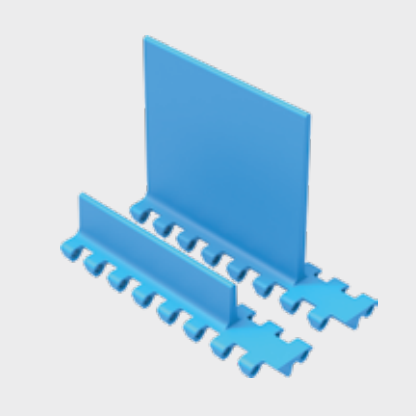

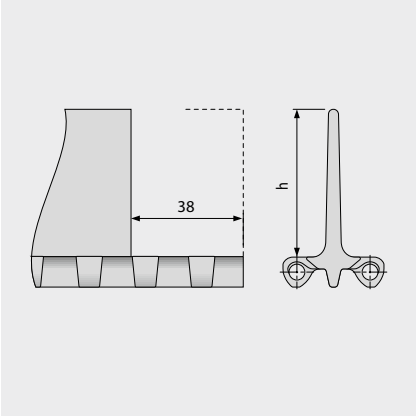


### Basic data

| Material | Color | Height (h) | |
|---|---|---|---|
| | | 25 mm<br>1 inch | 100 mm<br>4 inch |
| PE | LB | ●/▲ | ●/▲ |
| PE | WT | ●/▲ | ●/▲ |
| POM | LB | ●/▲ | ●/▲ |
| POM | WT | ●/▲ | ●/▲ |
| PP | LB | ●/▲ | ●/▲ |
| PP | WT | ●/▲ | ●/▲ |

● = no indent, ▲ = with indent 38 mm

Molded width: 152 mm (6.0 in)

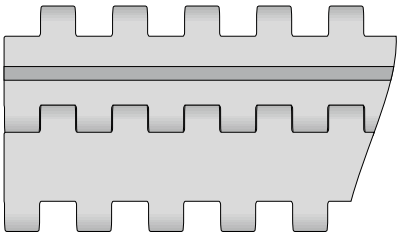

Standard configuration S10-0 FLT PMU

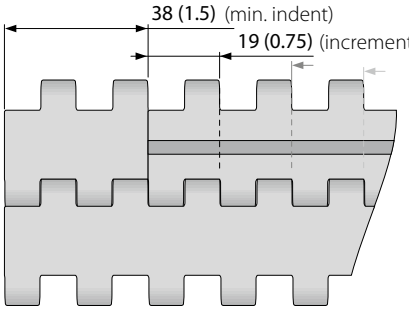


Indent configuration S10-0 FLT PMU

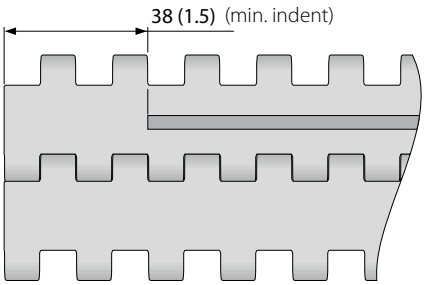


Standard configuration S10-0 FLT PMU I38

LB (Light blue), WT (White)

All measurements and tolerances apply at 21 °C; for temperature deviations please see Prolink manual chapter 4.4 "Temperature influence".
All imperial dimensions (inches) are rounded off.
Note: Use of accessory in a belt may impact on the minimum design radii. Please see chapter 6.3 for further information.

## S10-0 NCL PMU/S10-0 NCL PMU I38

No cling surface to improve release of wet and sticky products





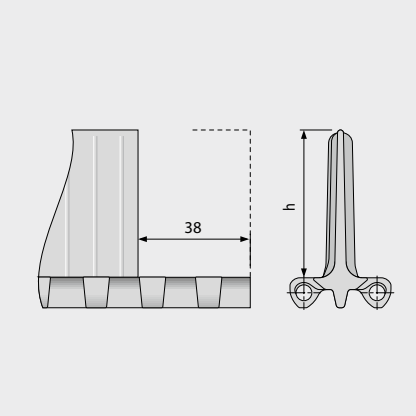


### Basic data

| Material | Color | Height (h) | |
|---|---|---|---|
| | | 25 mm<br>1 inch | 100 mm<br>4 inch |
| PE | LB/WT | ●/▲ | ●/▲ |
| PE-MD | BL | ❍/△ | ❍ |
| POM | LB/WT | ●/▲ | ●/▲ |
| POM-MD | BL | ❍/△ | ●/△ |
| PP | LB/WT | ●/▲ | ●/▲ |
| PP-MD | BL | | ●/▲ |

● = no indent, ▲ = with indent 38 mm, ❍ = no indent – mold to order, △ = with indent – mold to order

Molded width: 152 mm (6.0 in)

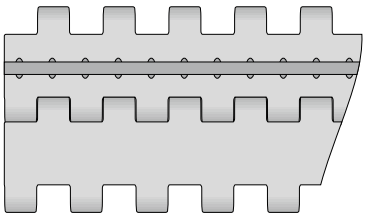

Standard configuration S10-0 NCL PMU

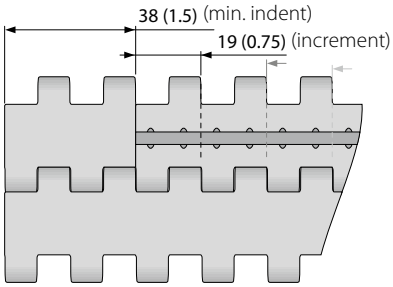


Indent configuration S10-0 NCL PMU

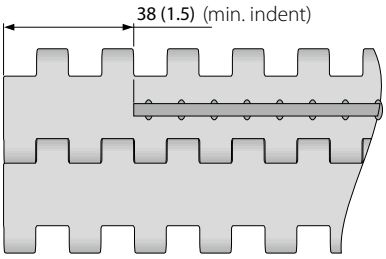


Standard configuration S10-0 NCL PMU I38

BL (Blue), LB (Light blue), WT (White)

All measurements and tolerances apply at 21 °C; for temperature deviations please see Prolink manual chapter 4.4 "Temperature influence".
All imperial dimensions (inches) are rounded off.
Note: Use of accessory in a belt may impact on the minimum design radii. Please see chapter 6.3 for further information.

# SERIES 10 | **SIDE GUARDS**

siegling prolink
modular belts

Straight running belt | Pitch 25.4 mm (1 in)

## **S10 SG** | Side guards

For retention of bulk products (only for modules $h_s$ = 0 mm/in)



Recommended running direction



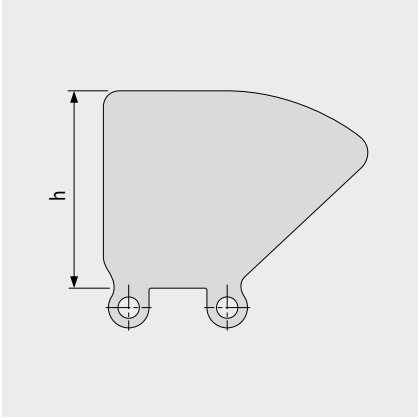


### Basic data

| Material | Color | Height (h) | | | |
|---|---|---|---|---|---|
| | | 25 mm<br>1 inch | 50 mm<br>2 inch | 75 mm<br>3 inch | 100 mm<br>4 inch |
| PE | LB | ● | ● | ● | ● |
| PE | WT | ● | ● | ● | ● |
| PE-MD | BL | ● | ● | | |
| PP | LB | ● | ● | ● | ● |
| PP | WT | ● | ● | ● | ● |

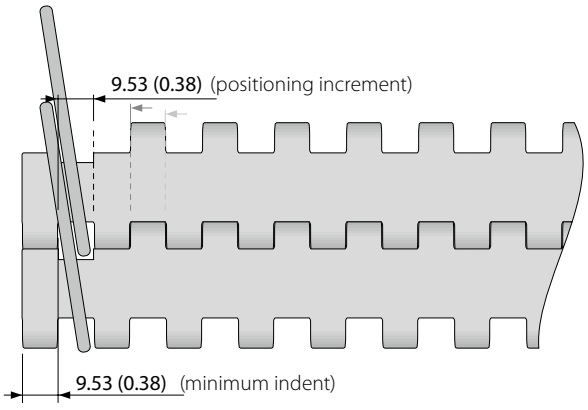


BL (Blue), LB (Light blue), WT (White)

All measurements and tolerances apply at 21 °C; for temperature deviations please see Prolink manual chapter 4.4 "Temperature influence".
All imperial dimensions (inches) are rounded off.
Note: Use of accessory in a belt may impact on the minimum design radii. Please see chapter 6.3 for further information.

Forbo
MOVEMENT SYSTEMS

# SERIES 10 | **HOLD DOWN TABS**

siegling prolink
modular belts

Straight running belt | Pitch 25.4 mm (1 in)

## **S10 HDT** | Hold Down Tabs

Used on wider belts to prevent lift an swan neck conveyors | To improve strength, stability and cleanability they are moulded on a narrow module

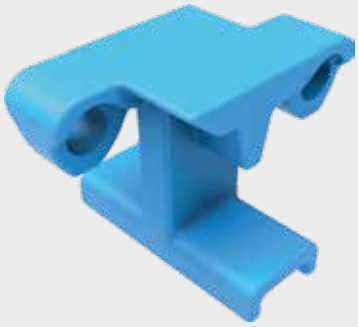

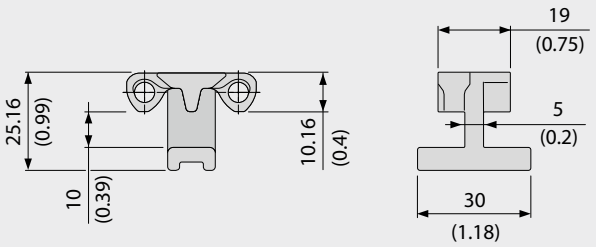


### Basic data

| Material | Color |
|---|---|
| POM | LB |
| | WT |

Using Hold Down Tabs results in constrains with regards to sprocket and shaft size to ensure sufficient clearance to the shaft (see also chapter 3.3 hold down tabs).

### Example

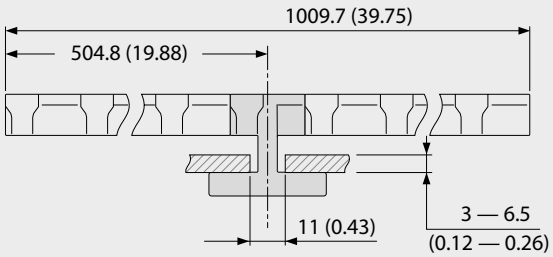


### Sprocket options using HDT

| Sprocket size (Number of teeth) | Maximum bore round | | Maximum bore square | |
|---|---|---|---|---|
| | [mm] | [inch] | [mm] | [inch] |
| Z6 | NR | NR | NR | NR |
| Z8 | 15 | 0.75 | 15 | 0.5 |
| Z10 | 35 | 1.25 | 25 | 1.0 |
| Z12 | 50 | 1.75 | 35 | 1.5 |
| Z15 | 70 | 2.75 | 55 | 2.0 |
| Z16 | 80 | 3.0 | 60 | 2.25 |
| Z18 | 95 | 3.5 | 70 | 2.75 |
| Z20 | 110 | 4.25 | 85 | 3.25 |

LB (Light blue), WT (White)

All measurements and tolerances apply at 21 °C; for temperature deviations please see Prolink manual chapter 4.4 "Temperature influence".
All imperial dimensions (inches) are rounded off.
Note: Use of accessory in a belt may impact on the minimum design radii. Please see chapter 6.3 for further information.

# LEGEND

| ① Series |
|---|
| S1 … S19 |

| ② Open area/Sprocket size |
|---|
| Percentage open area<br>Format: xx<br>E.g. 20 = 20 % |
| For sprockets: number of teeth<br>Format: "Z"xx<br>E.g. Z12 = 12 teeth |

| ③ Surface pattern | |
|---|---|
| **BSL** | Base module for slider |
| **CTP** | Cone top |
| **CUT** | Curved top |
| **FLT** | Flat top (smooth) |
| **FRT-OG** | Friction top without High Grip insert |
| **FRT(X)** | Friction top (Design X) |
| **GRT** | Grid top |
| **HDK** | High Deck |
| **LRB** | Lateral rib |
| **MOD** | Modified module shape |
| **NCL** | No cling |
| **NPY** | Negative pyramid |
| **NSK** | Non skid |
| **NSK2** | Non skid, nonwoven variant |
| **NTP** | Nub top (round studs) |
| **PRR** | Pin Retained Rollers |
| **RAT** | Radius top |
| **RRB** | Raised rib |
| **RSA** | Reduced surface area |
| **RTP** | Roller top |
| **SRS** | Slip-resistant surface |

| ④ Type | |
|---|---|
| **BPU** | Bucket profile |
| **CAP** | Pin lock & belt edge sealing |
| **CCW** | Counter clockwise |
| **CLP** | Clip |
| **CM** | Center module |
| **CW** | Clockwise |
| **FPL** | Finger plate |
| **HDT** | Hold Down Tab |
| **IDL** | Idler |
| **INS** | Insert |
| **PIN** | Coupling rod |
| **PMC** | Profile module center |
| **PMU** | Profile module universal |
| **PSP** | ProSnap |
| **PSU-0** | Prof. scoop uni. closed |
| **PSU-X** | Prof. scoop uni. x% open |
| **RI** | High Grip insert |
| **REL** | Reinforcement Link (SS) |
| **ROL** | Rollers |
| **RTR** | Retaining ring |
| **SG** | Module with sideguard |
| **SGL** | Side guard, left |
| **SGR** | Side guard, right |
| **SLI** | Slider |
| **SMA** | Side module, A side |
| **SMB** | Side module, B side |
| **SML** | Side module, left |
| **SMR** | Side module, right |
| **SMT** | Side module, tight radius |
| **SMU** | Side module, universal/both sides |
| **SPR** | Sprocket |
| **SPR-SP** | Split sprocket, 2-part |
| **SSL** | Self stacker side module, left |
| **SSR** | Self stacker side module, right |
| **TPL** | Turning panel, left |
| **TPR** | Turning panel, right |
| **UM** | Universal module |
| **WSC** | Wheel Stopper Center |
| **WSS** | Wheel Stopper Side |

| ⑤ Style | |
|---|---|
| **1.6** | 1.6 collapse factor |
| **1.7** | 1.7 collapse factor |
| **2.2** | 2.2 collapse factor |
| **2.2 G** | 2.2 collapse factor, guided |
| **A90** | Angle 90° to conveying direction |
| **BT** | Bearing tab |
| **DR** | Double row sprocket |
| **F1, F2, F3 …** | Collapse factor modules |
| **G** | Guided |
| **GT** | Guiding tabs |
| **HD** | Hold Down |
| **HR** | Hard removable pin |
| **Ixx** | xx = indent in mm |
| **RG** | Reversed guided |
| **SG** | Side guard |
| **SP** | Split sprocket |
| **ST** | Strong |
| **V2** | Version 2 indicates a design update |

| ⑥ Material | |
|---|---|
| **PA** | Polyamide |
| **PA-FR** | Polyamide flame retadant |
| **PA-FRHC** | Polyamide, flame retadant, high conductive |
| **PA-HT** | Polyamide high temperature |
| **PBT** | Polybutylenterephthalate |
| **PE** | Polyethylene |
| **PE-I** | PE impact resistant |
| **PE-MD** | PE metal detectable |
| **PK** | Wear & impact improved polymer |
| **PLX** | Special PK for pins with small diameter – higher stiffness |
| **POM** | Polyoxymethylene (Polyacetal) |
| **POM-CR** | POM cut resistant |
| **POM-HC** | POM highly conductive |
| **POM-MD** | POM metal detectable |
| **POM-PE** | POM side modules + PE center modules |
| **POM-PP** | POM side modules + PP center modules |
| **PP** | Polypropylene |
| **PP-MD** | PP metal detectable |
| **PP-SW** | PP steam and hot water resistant |
| **PXX-HC** | Self-extinguishing highly conductive material |
| **R1** | TPE 80 Shore A, PP |
| **R2** | EPDM 80 Shore A, vulcanized |
| **R3** | TPE 70 Shore A, POM |
| **R4** | TPE 86 Shore A, PP |
| **R5** | TPE 52 Shore A, PP |
| **R6** | TPE 63 Shore A, POM |
| **R7** | TPE 50 Shore A, PP |
| **R8** | TPE 55 Shore A, PE |
| **R11** | TPE 50 Shore A, POM |
| **SER** | Self-extinguishing TPE |
| **SS** | Stainless steel |
| **SSS** | Stainless steel acid resistant |
| **TPC1** | Themoplastic Copolyester |
| **-HA** | Supports the HACCP concept |
| **HW** | High Wear resistant material |

| ⑦ Color* | |
|---|---|
| **AT** | Anthracite |
| **BG** | Beige |
| **BK** | Black |
| **BL** | Blue |
| **DB** | Dark blue |
| **GN** | Green |
| **LB** | Light blue |
| **LG** | Light gray |
| **OR** | Orange |
| **RE** | Red |
| **TQ** | Turquoise |
| **UC** | Uncolored |
| **WT** | White |
| **YL** | Yellow |

| ⑧ Height/Diameter/ Bore size and style |
|---|
| Height in mm (in)<br>Format: Hxxx<br>Pin diameter in mm (in)<br>Format: Dxxx |
| Bore size: SQ (= square) or RD (= round) either in mm or inches<br>Format: SQxxMM or RDxxIN |

| ⑨ Length/Width |
|---|
| Pins Length in mm (in)<br>Format: Lxxx<br>Module width in mm (in)<br>Format: Wxxx<br>REL in mm one decimal<br>Format: Wx.x |

* For each series' standard colors please refer to the table of materials for each belt (chapter 1.2). A number of other colors are available on request. Colors can vary from the original due to the print, production processes or material used.