EXCERPT FROM PROLINK ENGINEERING MANUAL

05/26 (Ref-No. 888)

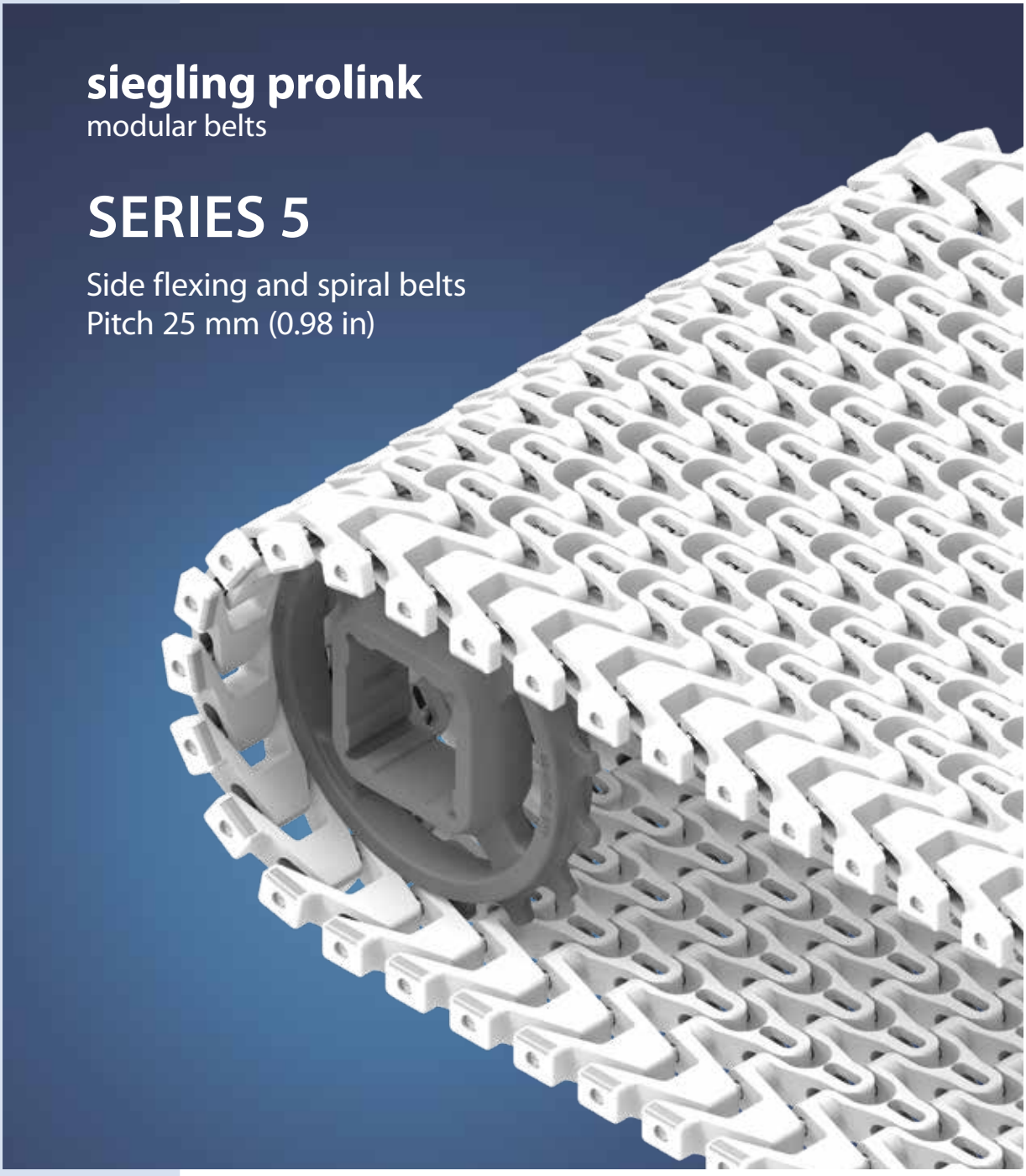

Forbo Siegling GmbH
Lilienthalstraße 6/8, D-30179 Hannover
Telefon +49 511 6704 0
www.forbo-siegling.com, siegling@forbo.com

Ref. no. 888-1_1.2_S5

SERIES 5 | **OVERVIEW**

siegling prolink
modular belts

Side flexing and spiral belts | Pitch 25 mm (0.98 in)

Belts for light to medium-duty food and non-food applications

Side view scale 1:1

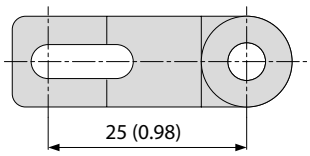

Design characteristics

- Suitable for both straight and radius conveying
- Up to 45 % open area for excellent air circulation and drainage
- Stainless steel hinge pins for high load capacity, lateral stiffness, fewer belt supports and minimum belt lifting in curves
- No potential belt edge catch points due to safe fixing of hinge pins

Basic data

Pitch	25 mm (0.98)
Belt width min.	100 mm (3.9 in), 175 mm (6.9 in) for S5 ST
Width increments	25 mm (0.98)
Hinge pins	5 mm (0.2 in) made of stainless steel

Available surface pattern and opening area

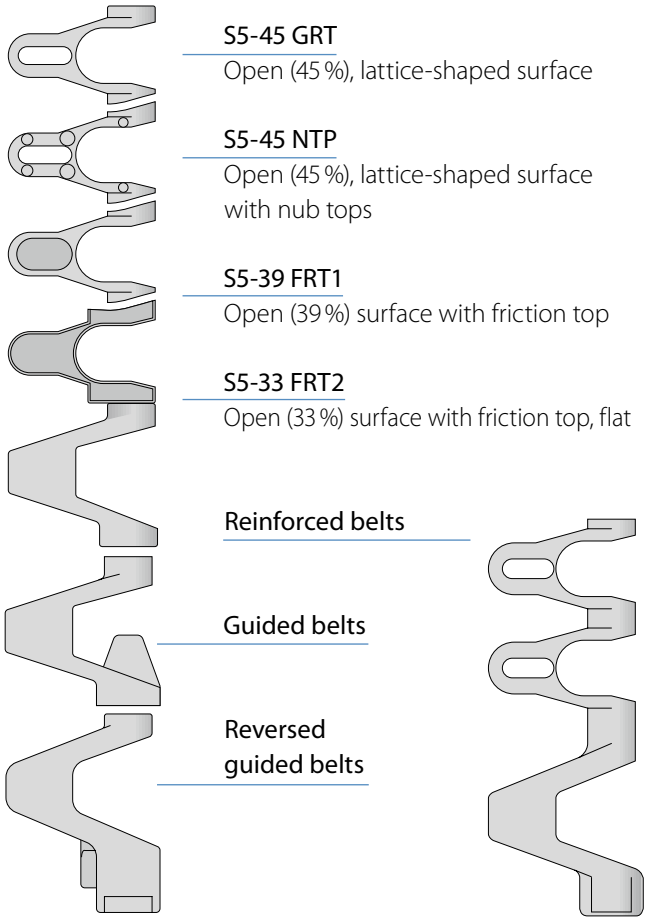

S5-45 GRT
Open (45 %), lattice-shaped surface

S5-45 NTP
Open (45 %), lattice-shaped surface with nub tops

S5-39 FRT1
Open (39 %) surface with friction top

S5-33 FRT2
Open (33 %) surface with friction top, flat

Reinforced belts

Guided belts

Reversed guided belts

Sprockets
in different sizes with round or square bore



Profiles
in different heights and designs for inclines



Side guards
in different heights for retention of bulk products



Ball-bearing modules
to minimize friction forces at the belt edge



SERIES 5 | **BELT TYPES**

Side flexing and spiral belt | Pitch 25 mm (0.98 in) | $C_C = 2.0$

S5-45 GRT | 45 % Opening | Grid top

Open area (45 %) for excellent air circulation and drainage | 42 % contact area (Largest opening: Ø = 10.6 mm/0.42 in) | Lattice shaped surface | Collapse factor (C_C) = 2.0

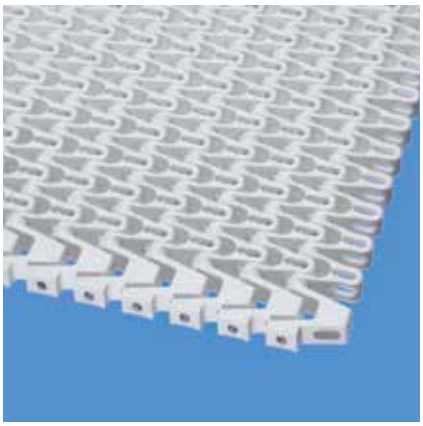

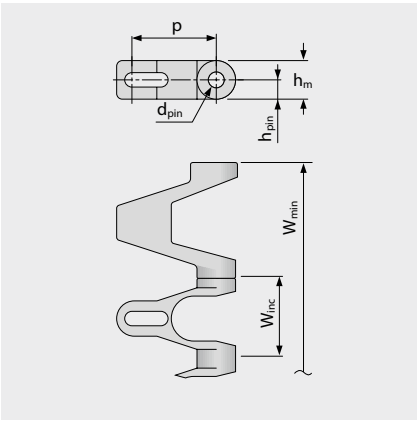

Variant specific dimensions [mm (in)]

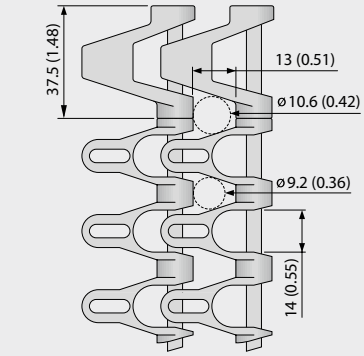

Belt dimensions

	p	d_{pin}	h_m	h_{pin}	h_s	W_{min}	W_{inc}	W_{tol}	Minimum flex radii[1]			
	Pitch	Pin Ø	Thickness	Pin position	Height	Width min.	Width Increment	Width tolerance [%]	r1 $C_c \times W_B$	r2	r3	r4	r5
mm	25.0	5.0	12.0	6.0	0.0	100.0	25.0	±0.3	2 x W_B	25.0	50.0	75.0	25.0
inch	0.98	0.2	0.47	0.24	0.0	3.94	0.98	±0.3	2 x W_B	0.98	1.97	2.95	0.98

W_B = Belt width, further information regarding r1 see page III-31

Available standard materials [3]

Belt		Pin	Nominal belt pull, straight		Nominal belt pull, curve		Weight		Width deviation	Temperature		Certificates[2]		
Material	Color	Material	[N/mm]	[lb/ft]	[N]	[lb]	[kg/m²]	[lb/ft²]	[%]	[°C]	[°F]	FDA	EU	MHLW
PE	WT/BL	SS	10	685	NR	NR	11.0	2.25	0.0	-70/65	-94/149	●	●	●
POM-CR	WT/DB/BL	SS	25	1713	1800	405	13.0	2.66	0.0	-45/90	-49/194	●	●	●
PP	WT/DB/BL	SS	18	1233	1000	225	10.0	2.05	0.0	5/100	41/212	●	●	●
Mold to order belts														
PA*	BL	SS	20	1370	1440	324	12.8	2.62	0.0	-40/120	-40/248	●	●	●

NR = not recommended

* Values valid for dry applications (RH <50 %). Belts in PA material will absorb water in wet environments, causing them to expand and reduce the nominal belt pull capacity.

BL (Blue), DB (Dark blue), WT (White)

All measurements and tolerances apply at 21 °C; for temperature deviations please see Prolink manual chapter 4.4 "Temperature influence".
All imperial dimensions (inches) are rounded off.

[1] Flex radii: r1 = side flex, r2 = front flex on roller, r3 = back flex on load bearing roller, r4 = back flex on Hold Down shoe, r5 = back flex on roller

[2] Complies with FDA 21 CFR | Complies with (EU) 10/2011 and (EC) 1935/2004 regulations regarding the raw materials used and the migration thresholds | Complies with Japanese MHLW Notification 370
● = available | – = not available | empty cells = not tested

[3] More materials and colors on request

SERIES 5 | **BELT TYPES**

Side flexing and spiral belt | Pitch 25 mm (0.98 in) | $C_C = 2.0$

S5-45 NTP | 45 % Opening | Nub top (round studs)

Open area (45 %) for excellent air circulation and drainage | Lattice shaped surface with 3.0 mm (0.12 in) high round studs and 8 % contact area (Largest opening: Ø = 10.6 mm/0.42 in) | Side modules without NTP-surface | Collapse factor (C_C) = 2.0

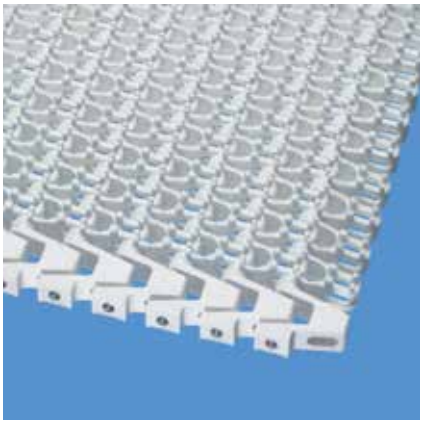

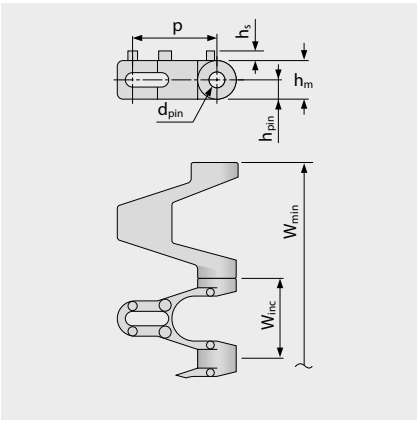

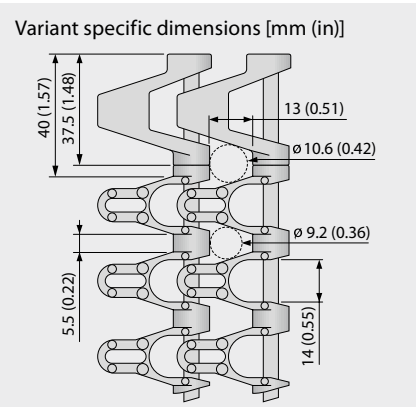

Belt dimensions

	p	d_{pin}	h_m	h_{pin}	h_s	W_{min}	W_{inc}	W_{tol}	Minimum flex radii[1]			
	Pitch	Pin Ø	Thickness	Pin position	Height	Width min.	Width Increment	Width tolerance [%]	r1 $C_c \times W_B$	r2	r3	r4	r5
mm	25.0	5.0	12.0	6.0	3.0	100.0	25.0	±0.3	2 x W_B	25.0	50.0	75.0	25.0
inch	0.98	0.2	0.47	0.24	0.12	3.94	0.98	±0.3	2 x W_B	0.98	1.97	2.95	0.98

W_B = Belt width, further information regarding r1 see page III-31

Mold to order belts [3]

Belt		Pin	Nominal belt pull, straight		Nominal belt pull, curve		Weight		Width deviation	Temperature		Certificates[2]		
Material	Color	Material	[N/mm]	[lb/ft]	[N]	[lb]	[kg/m²]	[lb/ft²]	[%]	[°C]	[°F]	FDA	EU	MHLW
PE	WT	SS	10	685	NR	NR	11.2	2.29	0.0	-70/65	-94/149	●	●	●
POM-CR	WT	SS	25	1713	1800	405	13.1	2.68	0.0	-45/90	-49/194	●	●	
PP	WT	SS	18	1233	1000	225	10.1	2.07	0.0	5/100	41/212	●	●	

NR = not recommended

☐ WT (White)

All measurements and tolerances apply at 21 °C; for temperature deviations please see Prolink manual chapter 4.4 "Temperature influence".
All imperial dimensions (inches) are rounded off.

[1] Flex radii: r1 = side flex, r2 = front flex on roller, r3 = back flex on load bearing roller, r4 = back flex on Hold Down shoe, r5 = back flex on roller

[2] Complies with FDA 21 CFR | Complies with (EU) 10/2011 and (EC) 1935/2004 regulations regarding the raw materials used and the migration thresholds | Complies with Japanese MHLW Notification 370

● = available | – = not available | empty cells = not tested

[3] More materials and colors on request

Side flexing and spiral belt | Pitch 25 mm (0.98 in) | $C_C = 2.0$

S5-39 FRT1 | 39 % Opening | Friction top (Design 1)

Excellent air circulation and drainage | Integrated friction pads (raised) increase surface friction and provide gentle grip | 8 % contact area (Largest opening: Ø = 10.6 mm/0.42 in) | Side modules without FRT-surface | Collapse factor (C_C) = 2.0

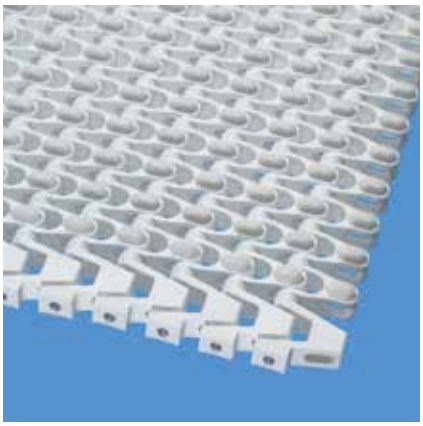

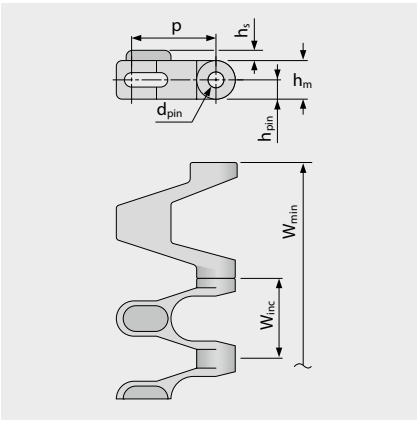

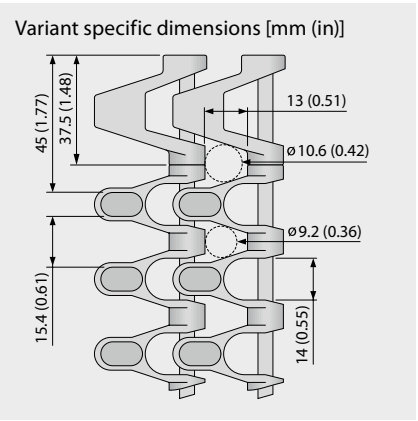

Belt dimensions

	p	d_{pin}	h_m	h_{pin}	h_s	W_{min}	W_{inc}	W_{tol}	Minimum flex radii[1]				
	Pitch	Pin Ø	Thickness	Pin position	Height	Width min.	Width Increment	Width tolerance [%]	r1 $C_c \times W_B$	r2	r3	r4	r5
mm	25.0	5.0	12.0	6.0	3.2	100.0	25.0	±0.3	2 x W_B	25.0	50.0	75.0	25.0
inch	0.98	0.2	0.47	0.24	0.13	3.94	0.98	±0.3	2 x W_B	0.98	1.97	2.95	0.98

W_B = Belt width, further information regarding r1 see page III-31

Available standard materials [3]

Belt		Pin	Rubber		Nominal belt pull, straight		Nominal belt pull, curve		Weight		Width deviation	Temperature		Certificates[2]		
Material	Color	Material	Material	Color	[N/mm]	[lb/ft]	[N]	[lb]	[kg/m²]	[lb/ft²]	[%]	[°C]	[°F]	FDA	EU	MHLW
POM-CR-PP	WT	SS	R4	BG	18	1233	1800	405	10.4	2.13	0.0	5/90	41/194			
PP	WT	SS	R4	BG	18	1233	1000	225	10.2	2.09	0.0	5/100	41/212			

BG (Beige), WT (White)

All measurements and tolerances apply at 21 °C; for temperature deviations please see Prolink manual chapter 4.4 "Temperature influence".
All imperial dimensions (inches) are rounded off.

[1] Flex radii: r1 = side flex, r2 = front flex on roller, r3 = back flex on load bearing roller, r4 = back flex on Hold Down shoe, r5 = back flex on roller

[2] Complies with FDA 21 CFR | Complies with (EU) 10/2011 and (EC) 1935/2004 regulations regarding the raw materials used and the migration thresholds | Complies with Japanese MHLW Notification 370

● = available | – = not available | empty cells = not tested

[3] More materials and colors on request

Side flexing and spiral belt | Pitch 25 mm (0.98 in) | $C_C = 2.0$

S5-33 FRT2 | 33 % Opening | Friction top (Design 2)

Open area (33 % for full FRT2 surface area) for excellent air circulation and drainage | Integrated friction pads (flat) provide gentle grip | 47 % contact area (Largest opening: Ø = 8.6 mm/0.34 in) | Side modules without FRT-surface | Collapse factor (C_C) = 2.0

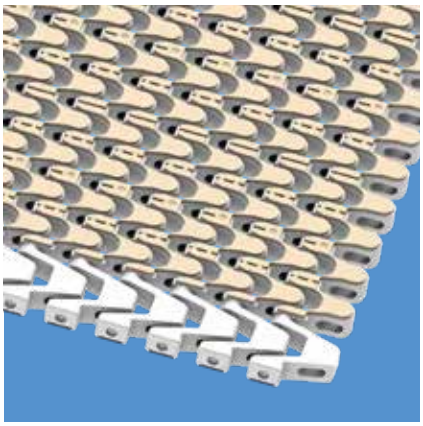

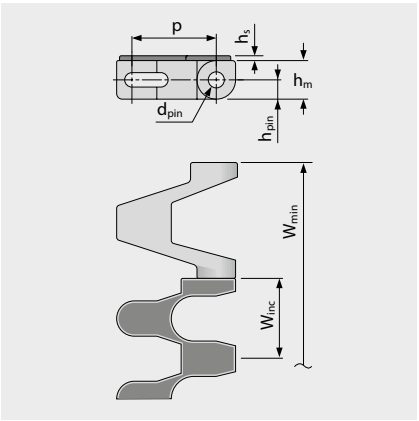

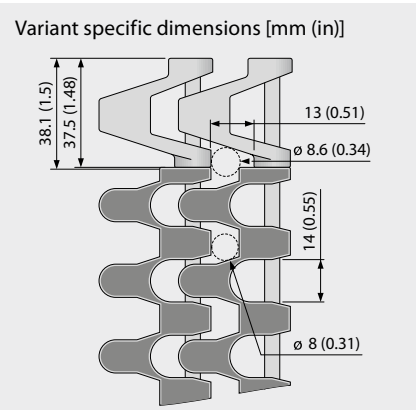

Belt dimensions

	p	d_{pin}	h_m	h_{pin}	h_s	W_{min}	W_{inc}	W_{tol}	Minimum flex radii[1]				
	Pitch	Pin Ø	Thickness	Pin position	Height	Width min.	Width Increment	Width tolerance [%]	r1 $C_c \times W_B$	r2	r3	r4	r5
mm	25.0	5.0	12.0	6.0	1.5	100.0	25.0	±0.3	2 x W_B	25.0	50.0	75.0	25.0
inch	0.98	0.2	0.47	0.24	0.06	3.94	0.98	±0.3	2 x W_B	0.98	1.97	2.95	0.98

W_B = Belt width, further information regarding r1 see page III-31

Available standard materials [3]

Belt		Pin	Rubber		Nominal belt pull, straight		Nominal belt pull, curve		Weight		Width deviation	Temperature		Certificates[2]		
Material	Color	Material	Material	Color	[N/mm]	[lb/ft]	[N]	[lb]	[kg/m²]	[lb/ft²]	[%]	[°C]	[°F]	FDA	EU	MHLW
POM-CR-PP	WT	SS	R7	BG	18	1233	1800	405	11.7	2.40	0.0	5/90	41/194	●	●	
POM-CR-PP	BL	SS	R7	BG	18	1233	1800	405	11.7	2.40	0.0	5/90	41/194	●	●	
POM-CR-PP	BL	SS	R7	BK	18	1233	1800	405	11.7	2.40	0.0	5/90	41/194	●	●	
PP	WT	SS	R7	BG	18	1233	1000	225	11.4	2.33	0.0	5/100	41/212	●	●	
PP	BL	SS	R7	BG	18	1233	1000	225	11.4	2.33	0.0	5/100	41/212	●	●	
PP	BL	SS	R7	BK	18	1233	1000	225	11.4	2.33	0.0	5/100	41/212	●	●	

BG (Beige), BK (Black), BL (Blue), WT (White)

All measurements and tolerances apply at 21 °C; for temperature deviations please see Prolink manual chapter 4.4 "Temperature influence".
All imperial dimensions (inches) are rounded off.

[1] Flex radii: r1 = side flex, r2 = front flex on roller, r3 = back flex on load bearing roller, r4 = back flex on Hold Down shoe, r5 = back flex on roller

[2] Complies with FDA 21 CFR | Complies with (EU) 10/2011 and (EC) 1935/2004 regulations regarding the raw materials used and the migration thresholds | Complies with Japanese MHLW Notification 370
● = available | – = not available | empty cells = not tested

[3] More materials and colors on request

Forbo
MOVEMENT SYSTEMS

SERIES 5 | **BELT TYPES**

siegling prolink
modular belts

Side flexing and spiral belt | Pitch 25 mm (0.98 in) | $C_C = 2.0$

S5-45 GRT G | 45 % Opening | Grid top · guided

Excellent air circulation and drainage | 42 % contact area (Largest opening: Ø = 10.6 mm/0.42 in) | Lattice shaped surface and Hold Down Tabs | Allows utilization of the entire belt width | Collapse factor (C_C) = 2.0

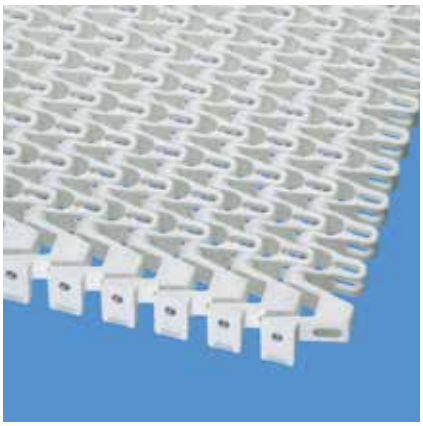

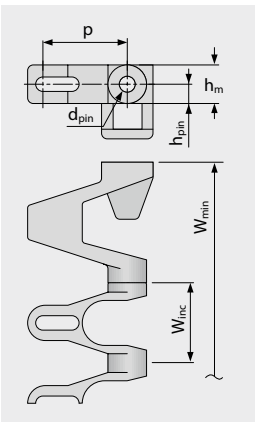

Variant specific dimensions [mm (in)]

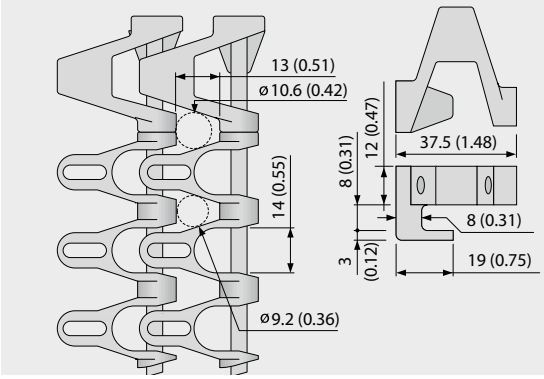

Belt dimensions

	p	d_{pin}	h_m	h_{pin}	h_s	W_{min}	W_{inc}	W_{tol}	Minimum flex radii[1]			
	Pitch	Pin Ø	Thickness	Pin position	Height	Width min.	Width Increment	Width tolerance [%]	r1 $C_c \times W_B$	r2	r3	r4	r5
mm	25.0	5.0	12.0	6.0	0.0	100.0	25.0	±0.3	2 x W_B	50.0	50.0	75.0	25.0
inch	0.98	0.2	0.47	0.24	0.0	3.94	0.98	±0.3	2 x W_B	1.97	1.97	2.95	0.98

W_B = Belt width, further information regarding r1 see page III-31

Available standard materials [3]

Belt		Pin	Nominal belt pull, straight		Nominal belt pull, curve		Weight		Width deviation	Temperature		Certificates[2]		
Material	Color	Material	[N/mm]	[lb/ft]	[N]	[lb]	[kg/m²]	[lb/ft²]	[%]	[°C]	[°F]	FDA	EU	MHLW
POM-CR	WT	SS	25	1713	1800	405	13.0	2.66	0.0	-45/90	-49/194	●	●	●
POM-CR	BL	SS	25	1713	1800	405	13.0	2.66	0.0	-45/90	-49/194	●	●	●
PP	WT	SS	18	1233	1000	225	10.0	2.05	0.0	5/100	41/212	●	●	●
Mold to order belts														
PA*	BL	SS	20	1370	1440	324	12.8	2.62	0.0	-40/120	-40/248	●	●	●
PE	WT	SS	10	685	NR	NR	11.0	2.25	0.0	-70/65	-94/149	●	●	●
POM-CR	DB	SS	25	1713	1800	405	13.0	2.66	0.0	-45/90	-49/194	●	●	●

NR = not recommended

* Values valid for dry applications (RH <50 %). Belts in PA material will absorb water in wet environments, causing them to expand and reduce the nominal belt pull capacity.

BL (Blue), DB (Dark blue), WT (White)

All measurements and tolerances apply at 21 °C; for temperature deviations please see Prolink manual chapter 4.4 "Temperature influence".
All imperial dimensions (inches) are rounded off.

[1] Flex radii: r1 = side flex, r2 = front flex on roller, r3 = back flex on load bearing roller, r4 = back flex on Hold Down shoe, r5 = back flex on roller
Attention: Restrictions on sprocket size and corresponding shaft options – please check sprocket data sheet

[2] Complies with FDA 21 CFR | Complies with (EU) 10/2011 and (EC) 1935/2004 regulations regarding the raw materials used and the migration thresholds | Complies with Japanese MHLW Notification 370
● = available | – = not available | empty cells = not tested

[3] More materials and colors on request

forbo
MOVEMENT SYSTEMS

SERIES 5 | **BELT TYPES**

Side flexing and spiral belt | Pitch 25 mm (0.98 in) | $C_C = 2.0$

S5-45 NTP G | 45 % Opening | Nub top (round studs) · guided

Open area (45 %) for excellent air circulation and drainage | Lattice shaped surface with 3.0 mm (0.12 in) high round studs and 8 % contact area (Largest opening: Ø = 10.6 mm/0.42 in) | Side modules without NTP-surface | Allows utilization of the entire belt width | Collapse factor (C_C) = 2.0



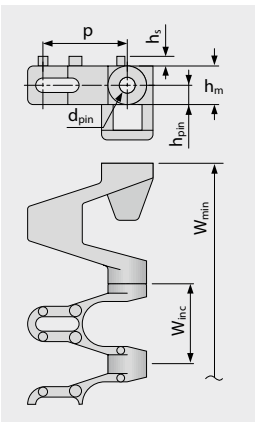

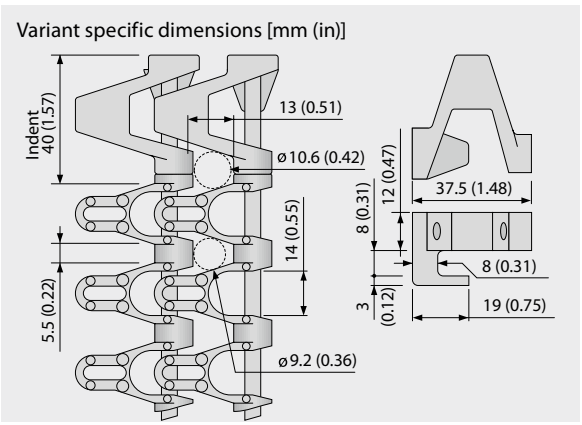

Belt dimensions

	p	d_{pin}	h_m	h_{pin}	h_s	W_{min}	W_{inc}	W_{tol}	Minimum flex radii[1]				
	Pitch	Pin Ø	Thickness	Pin position	Height	Width min.	Width Increment	Width tolerance [%]	r1 $C_c \times W_B$	r2	r3	r4	r5
mm	25.0	5.0	12.0	6.0	3.0	100.0	25.0	±0.3	2 x W_B	50.0	50.0	75.0	25.0
inch	0.98	0.2	0.47	0.24	0.12	3.94	0.98	±0.3	2 x W_B	1.97	1.97	2.95	0.98

W_B = Belt width, further information regarding r1 see page III-31

Mold to order belts [3]

Belt		Pin	Nominal belt pull, straight		Nominal belt pull, curve		Weight		Width deviation	Temperature		Certificates[2]		
Material	Color	Material	[N/mm]	[lb/ft]	[N]	[lb]	[kg/m²]	[lb/ft²]	[%]	[°C]	[°F]	FDA	EU	MHLW
POM-CR	WT	SS	25	1713	1800	405	13.2	2.70	0.0	-45/90	-49/194	●	●	●
PP	WT	SS	18	1233	1000	225	10.2	2.09	0.0	5/100	41/212	●	●	●

☐ WT (White)

All measurements and tolerances apply at 21 °C; for temperature deviations please see Prolink manual chapter 4.4 "Temperature influence".
All imperial dimensions (inches) are rounded off.

[1] Flex radii: r1 = side flex, r2 = front flex on roller, r3 = back flex on load bearing roller, r4 = back flex on Hold Down shoe, r5 = back flex on roller
Attention: Restrictions on sprocket size and corresponding shaft options – please check sprocket data sheet

[2] Complies with FDA 21 CFR | Complies with (EU) 10/2011 and (EC) 1935/2004 regulations regarding the raw materials used and the migration thresholds | Complies with Japanese MHLW Notification 370
● = available | – = not available | empty cells = not tested

[3] More materials and colors on request

S5-39 FRT1 G | 39 % Opening | Friction top (Design 1) · guided

Excellent air circulation and drainage | Integrated friction pads (raised) increase surface friction and provide gentle grip (Largest opening: Ø = 10.6 mm/0.42 in) | Allows utilization of the entire belt width | Side modules without FRT-surface | Collapse factor (C_C) = 2.0

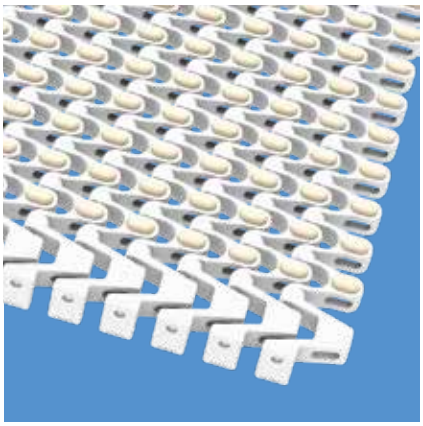

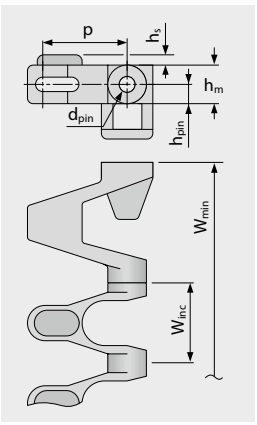

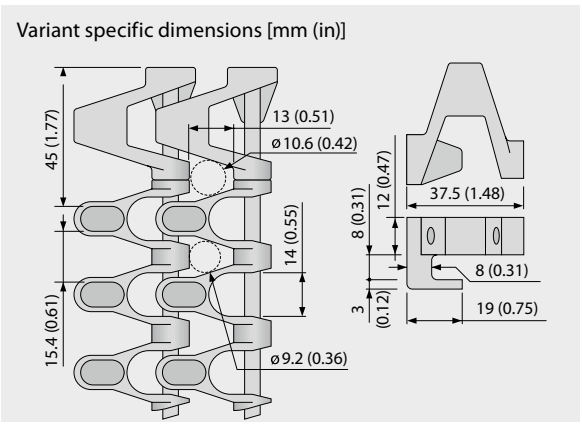

Belt dimensions

	p	d_{pin}	h_m	h_{pin}	h_s	W_{min}	W_{inc}	W_{tol}	Minimum flex radii[1]				
	Pitch	Pin Ø	Thickness	Pin position	Height	Width min.	Width Increment	Width tolerance [%]	r1 C_c x W_B	r2	r3	r4	r5
mm	25.0	5.0	12.0	6.0	3.2	100.0	25.0	±0.3	2 x W_B	50.0	50.0	75.0	25.0
inch	0.98	0.2	0.47	0.24	0.13	3.94	0.98	±0.3	2 x W_B	1.97	1.97	2.95	0.98

W_B = Belt width, further information regarding r1 see page III-31

Available standard materials [3]

Belt		Pin	Rubber		Nominal belt pull, straight		Nominal belt pull, curve		Weight		Width deviation	Temperature		Certificates[2]		
Material	Color	Material	Material	Color	[N/mm]	[lb/ft]	[N]	[lb]	[kg/m²]	[lb/ft²]	[%]	[°C]	[°F]	FDA	EU	MHLW
POM-CR-PP	WT	SS	R4	BG	18	1233	1800	405	10.5	2.15	0.0	5/90	41/194			
PP	WT	SS	R4	BG	18	1233	1000	225	10.2	2.09	0.0	5/100	41/212			

BG (Beige), WT (White)

All measurements and tolerances apply at 21 °C; for temperature deviations please see Prolink manual chapter 4.4 "Temperature influence".
All imperial dimensions (inches) are rounded off.

[1] Flex radii: r1 = side flex, r2 = front flex on roller, r3 = back flex on load bearing roller, r4 = back flex on Hold Down shoe, r5 = back flex on roller
Attention: Restrictions on sprocket size and corresponding shaft options – please check sprocket data sheet

[2] Complies with FDA 21 CFR | Complies with (EU) 10/2011 and (EC) 1935/2004 regulations regarding the raw materials used and the migration thresholds | Complies with Japanese MHLW Notification 370
● = available | – = not available | empty cells = not tested

[3] More materials and colors on request

SERIES 5 | **BELT TYPES**

Side flexing and spiral belt | Pitch 25 mm (0.98 in) | $C_C = 2.0$

S5-33 FRT2 G | 33 % Opening | Friction top (Design 2) · guided

Open area (33 % for full FRT2 surface area) for excellent air circulation and drainage | 47 % contact area (Largest opening: Ø = 8.6 mm/0.34 in) | Integrated friction pads (flat) provide gentle grip | Allows utilization of the entire belt width | Side modules without FRT-surface | Collapse factor (C_C) = 2.0

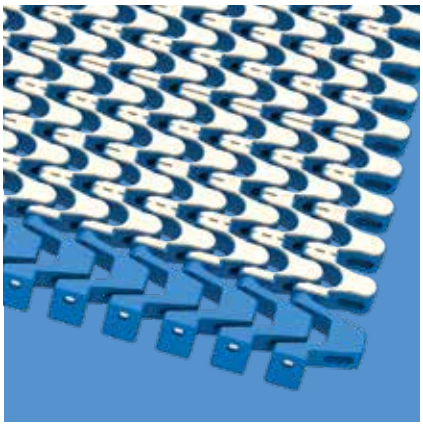

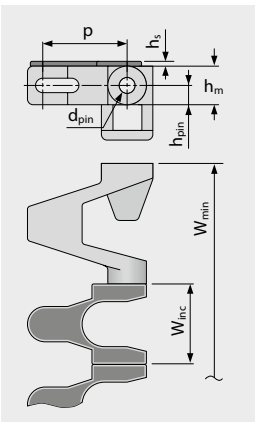

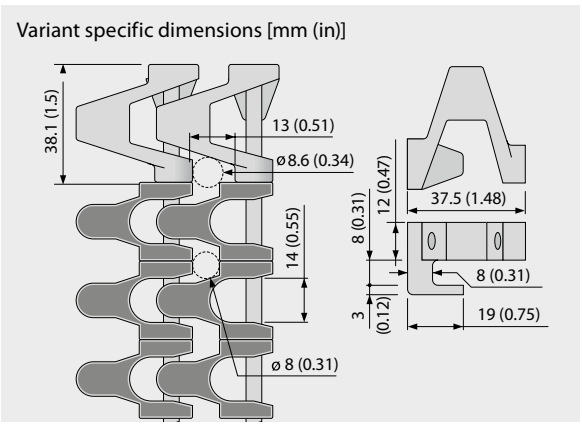

Belt dimensions

	p	d_{pin}	h_m	h_{pin}	h_s	W_{min}	W_{inc}	W_{tol}	Minimum flex radii[1]				
	Pitch	Pin Ø	Thickness	Pin position	Height	Width min.	Width Increment	Width tolerance [%]	r1 $C_c \times W_B$	r2	r3	r4	r5
mm	25.0	5.0	12.0	6.0	1.5	100.0	25.0	±0.3	2 x W_B	50.0	50.0	75.0	25.0
inch	0.98	0.2	0.47	0.24	0.06	3.94	0.98	±0.3	2 x W_B	1.97	1.97	2.95	0.98

W_B = Belt width, further information regarding r1 see page III-31

Available standard materials [3]

Belt		Pin	Rubber		Nominal belt pull, straight		Nominal belt pull, curve		Weight		Width deviation	Temperature		Certificates[2]		
Material	Color	Material	Material	Color	[N/mm]	[lb/ft]	[N]	[lb]	[kg/m²]	[lb/ft²]	[%]	[°C]	[°F]	FDA	EU	MHLW
POM-CR-PP	WT	SS	R7	BG	18	1233	1800	405	11.7	2.40	0.0	5/90	41/194	●	●	
POM-CR-PP	BL	SS	R7	BG	18	1233	1800	405	11.7	2.40	0.0	5/90	41/194	●	●	
POM-CR-PP	BL	SS	R7	BK	18	1233	1800	405	11.7	2.40	0.0	5/90	41/194	●	●	
PP	WT	SS	R7	BG	18	1233	1000	225	11.4	2.33	0.0	5/100	41/212	●	●	
PP	BL	SS	R7	BG	18	1233	1000	225	11.4	2.33	0.0	5/100	41/212	●	●	
PP	BL	SS	R7	BK	18	1233	1000	225	11.4	2.33	0.0	5/100	41/212	●	●	

BG (Beige), BK (Black), BL (Blue), WT (White)

All measurements and tolerances apply at 21 °C; for temperature deviations please see Prolink manual chapter 4.4 "Temperature influence".
All imperial dimensions (inches) are rounded off.

[1] Flex radii: r1 = side flex, r2 = front flex on roller, r3 = back flex on load bearing roller, r4 = back flex on Hold Down shoe, r5 = back flex on roller
Attention: Restrictions on sprocket size and corresponding shaft options – please check sprocket data sheet

[2] Complies with FDA 21 CFR | Complies with (EU) 10/2011 and (EC) 1935/2004 regulations regarding the raw materials used and the migration thresholds | Complies with Japanese MHLW Notification 370
● = available | – = not available | empty cells = not tested

[3] More materials and colors on request

SERIES 5 | **BELT TYPES**

siegling prolink
modular belts

Side flexing and spiral belt | Pitch 25 mm (0.98 in) | $C_C = 2.0$

S5-45 GRT RG | 45 % Opening | Grid top · reverse guided

Excellent air circulation and drainage | Lattice shaped surface and reversed Hold Down Tabs | 42 % contact area (Largest opening: Ø = 10.5 mm/0.41 in) | Smooth surface | Allows utilization of the entire belt width | Collapse factor (C_C) = 2.0

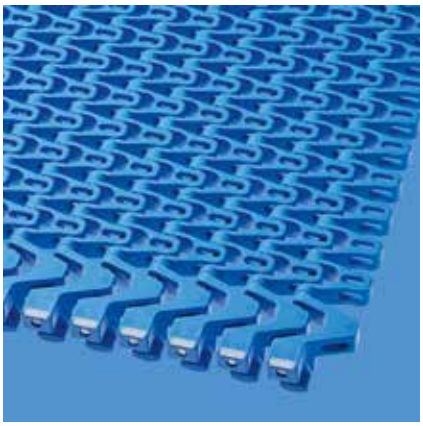

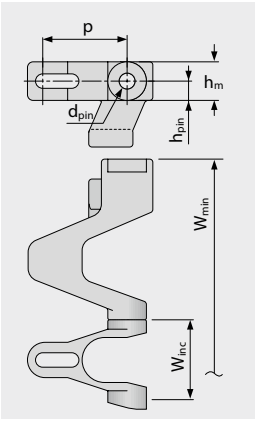

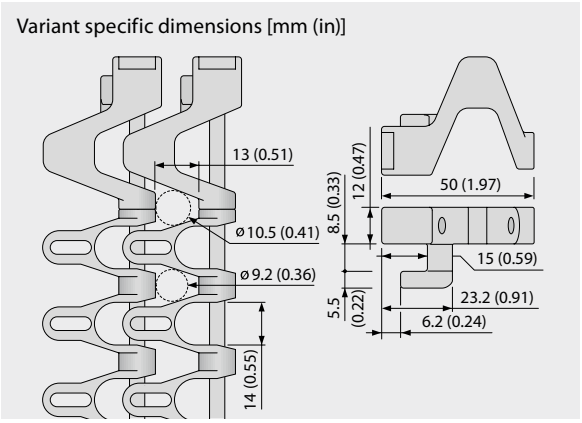

Belt dimensions

	p	d_{pin}	h_m	h_{pin}	h_s	W_{min}	W_{inc}	W_{tol}	Minimum flex radii[1]			
	Pitch	Pin Ø	Thickness	Pin position	Height	Width min.	Width Increment	Width tolerance [%]	r1 C_c x W_B	r2	r3	r4	r5
mm	25.0	5.0	12.0	6.0	0.0	125.0	25.0	±0.3	2 x W_B	50.0	50.0	75.0	25.0
inch	0.98	0.2	0.47	0.24	0.0	4.92	0.98	±0.3	2 x W_B	1.97	1.97	2.95	0.98

W_B = Belt width, further information regarding r1 see page III-31

Available standard materials [3]

Belt		Pin	Nominal belt pull, straight		Nominal belt pull, curve		Weight		Width deviation	Temperature		Certificates[2]		
Material	Color	Material	[N/mm]	[lb/ft]	[N]	[lb]	[kg/m²]	[lb/ft²]	[%]	[°C]	[°F]	FDA	EU	MHLW
POM-CR	BL	SS	25	1713	2100	472	13.0	2.66	0.0	-45/90	-49/194	●	●	●
Mold to order belts														
PE	WT	SS	10	685	NR	NR	11.0	2.25	0.0	-70/65	-94/149	●	●	●
PP	WT	SS	18	1233	1200	270	10.0	2.05	0.0	5/100	41/212	●	●	●

NR = not recommended

BL (Blue), WT (White)

All measurements and tolerances apply at 21 °C; for temperature deviations please see Prolink manual chapter 4.4 "Temperature influence".
All imperial dimensions (inches) are rounded off.

[1] Flex radii: r1 = side flex, r2 = front flex on roller, r3 = back flex on load bearing roller, r4 = back flex on Hold Down shoe, r5 = back flex on roller
Attention: Restrictions on sprocket size and corresponding shaft options – please check sprocket data sheet

[2] Complies with FDA 21 CFR | Complies with (EU) 10/2011 and (EC) 1935/2004 regulations regarding the raw materials used and the migration thresholds | Complies with Japanese MHLW Notification 370
● = available | – = not available | empty cells = not tested

[3] More materials and colors on request

Forbo
MOVEMENT SYSTEMS

S5-45 NTP RG | 45 % Opening | Nub top (round studs) · reverse guided

Excellent air circulation and drainage | With round studs for increased grip (8 % contact area, largest opening: Ø = 10.5 mm/0.41 in) | Allows utilization of the entire belt width | Side modules only available without NTP-pattern | Collapse factor (C_C) = 2.0

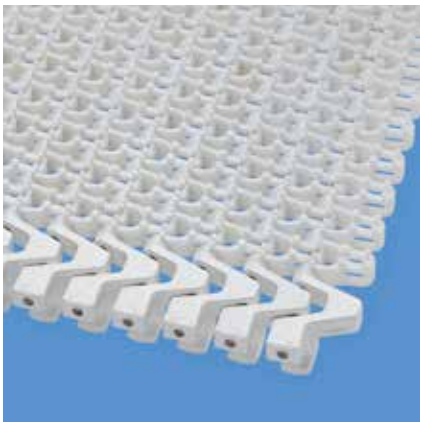

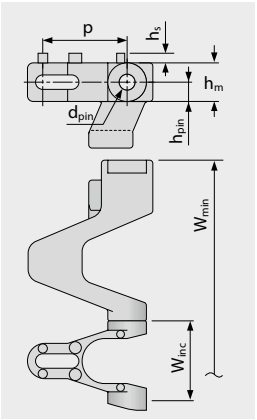

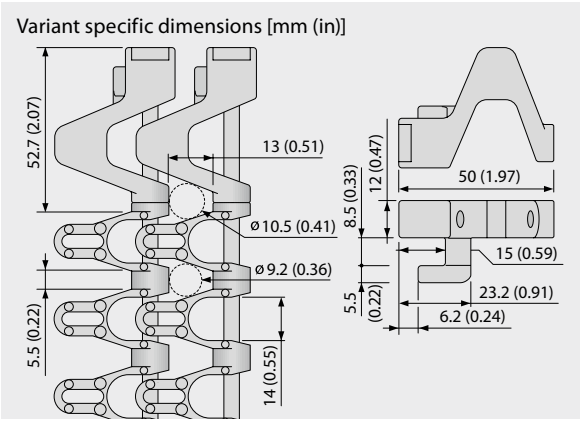

Belt dimensions

	p	d_{pin}	h_m	h_{pin}	h_s	W_{min}	W_{inc}	W_{tol}	Minimum flex radii[1]			
	Pitch	Pin Ø	Thickness	Pin position	Height	Width min.	Width Increment	Width tolerance [%]	r1 $C_c \times W_B$	r2	r3	r4	r5
mm	25.0	5.0	12.0	6.0	3.0	125.0	25.0	±0.3	2 x W_B	50.0	50.0	75.0	25.0
inch	0.98	0.2	0.47	0.24	0.12	4.92	0.98	±0.3	2 x W_B	1.97	1.97	2.95	0.98

W_B = Belt width, further information regarding r1 see page III-31

Mold to order belts [3]

Belt		Pin	Nominal belt pull, straight		Nominal belt pull, curve		Weight		Width deviation	Temperature		Certificates[2]		
Material	Color	Material	[N/mm]	[lb/ft]	[N]	[lb]	[kg/m²]	[lb/ft²]	[%]	[°C]	[°F]	FDA	EU	MHLW
POM-CR	WT	SS	25	1713	2100	472	13.2	2.7	0.0	-45/90	-49/194	●	●	●

☐ WT (White)

All measurements and tolerances apply at 21 °C; for temperature deviations please see Prolink manual chapter 4.4 "Temperature influence".
All imperial dimensions (inches) are rounded off.

[1] Flex radii: r1 = side flex, r2 = front flex on roller, r3 = back flex on load bearing roller, r4 = back flex on Hold Down shoe, r5 = back flex on roller
Attention: Restrictions on sprocket size and corresponding shaft options – please check sprocket data sheet

[2] Complies with FDA 21 CFR | Complies with (EU) 10/2011 and (EC) 1935/2004 regulations regarding the raw materials used and the migration thresholds | Complies with Japanese MHLW Notification 370
● = available | – = not available | empty cells = not tested

[3] More materials and colors on request

S5-39 FRT1 RG | 39 % Opening | Friction top (Design 1) · reverse guided

Excellent air circulation and drainage | Integrated friction pads (raised) increase surface friction and provide gentle grip (Largest opening: Ø = 10.5 mm/0.41 in) | Allows utilization of the entire belt width | Side modules without FRT-surface | Collapse factor (C_C) = 2.0

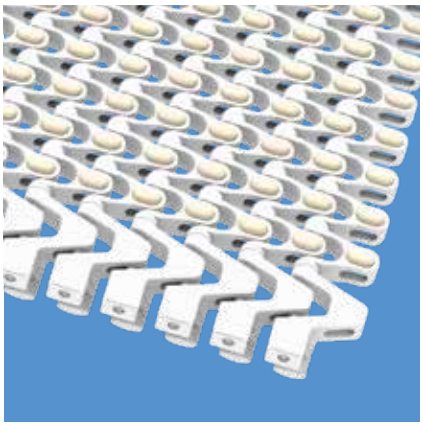

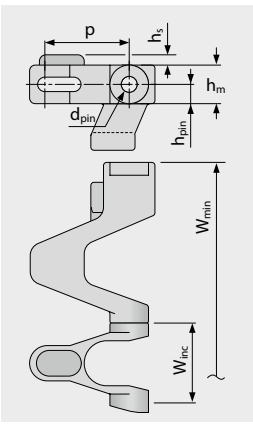

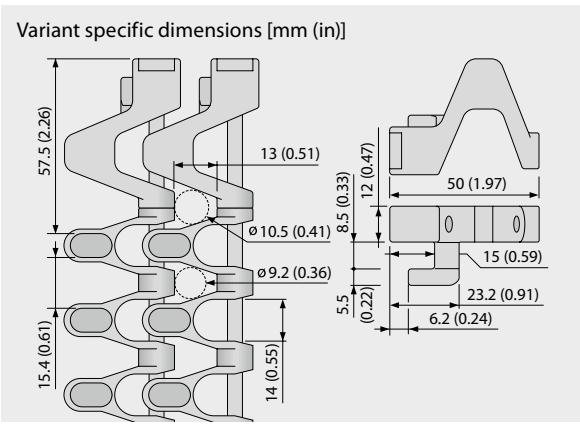

Belt dimensions

	p	d_{pin}	h_m	h_{pin}	h_s	W_{min}	W_{inc}	W_{tol}	Minimum flex radii[1]				
	Pitch	Pin Ø	Thickness	Pin position	Height	Width min.	Width Increment	Width tolerance [%]	r1 $C_c \times W_B$	r2	r3	r4	r5
mm	25.0	5.0	12.0	6.0	3.2	125.0	25.0	±0.3	2 x W_B	50.0	50.0	75.0	25.0
inch	0.98	0.2	0.47	0.24	0.13	4.92	0.98	±0.3	2 x W_B	1.97	1.97	2.95	0.98

W_B = Belt width, further information regarding r1 see page III-31

Available standard materials [3]

Belt		Pin	Rubber		Nominal belt pull, straight		Nominal belt pull, curve		Weight		Width deviation	Temperature		Certificates[2]		
Material	Color	Material	Material	Color	[N/mm]	[lb/ft]	[N]	[lb]	[kg/m²]	[lb/ft²]	[%]	[°C]	[°F]	FDA	EU	MHLW
POM-CR-PP	WT	SS	R4	BG	18	1233	2100	472	10.2	2.09	0.0	5/90	-49/194			

BG (Beige), WT (White)

All measurements and tolerances apply at 21 °C; for temperature deviations please see Prolink manual chapter 4.4 "Temperature influence".
All imperial dimensions (inches) are rounded off.

[1] Flex radii: r1 = side flex, r2 = front flex on roller, r3 = back flex on load bearing roller, r4 = back flex on Hold Down shoe, r5 = back flex on roller
Attention: Restrictions on sprocket size and corresponding shaft options – please check sprocket data sheet

[2] Complies with FDA 21 CFR | Complies with (EU) 10/2011 and (EC) 1935/2004 regulations regarding the raw materials used and the migration thresholds | Complies with Japanese MHLW Notification 370
● = available | – = not available | empty cells = not tested

[3] More materials and colors on request

Side flexing and spiral belt | Pitch 25 mm (0.98 in) | $C_C = 2.0$

S5-33 FRT2 RG | 33 % Opening | Friction top (Design 2) · reverse guided

Open area (33 % for full FRT2 surface area) for excellent air circulation and drainage | 47 % contact area (Largest opening: Ø = 8.6 mm/0.34 in) | Integrated friction pads (flat) provide gentle grip | Allows utilization of the entire belt width | Side modules without FRT-surface | Collapse factor (C_C) = 2.0

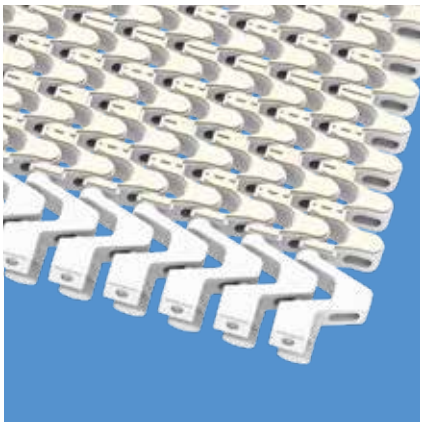

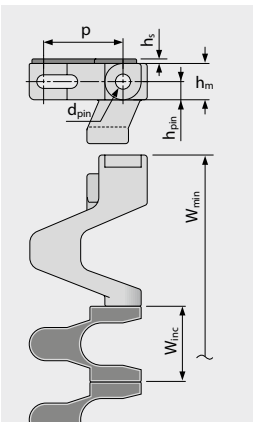

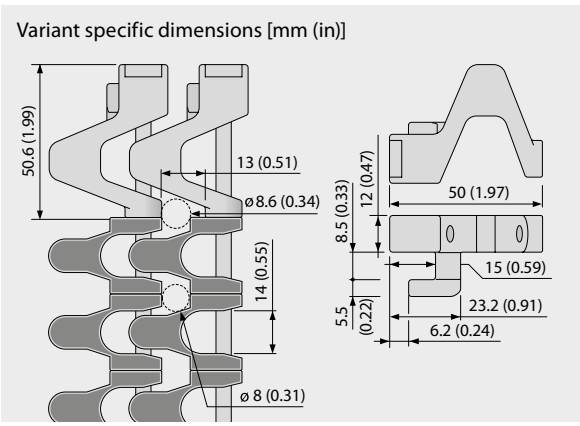

Belt dimensions

	p	d_{pin}	h_m	h_{pin}	h_s	W_{min}	W_{inc}	W_{tol}	Minimum flex radii[1]				
	Pitch	Pin Ø	Thickness	Pin position	Height	Width min.	Width Increment	Width tolerance [%]	r1 $C_c \times W_B$	r2	r3	r4	r5
mm	25.0	5.0	12.0	6.0	1.5	125.0	25.0	±0.3	2 x W_B	50.0	50.0	75.0	25.0
inch	0.98	0.2	0.47	0.24	0.06	4.92	0.98	±0.3	2 x W_B	1.97	1.97	2.95	0.98

W_B = Belt width, further information regarding r1 see page III-31

Available standard materials [3]

Belt		Pin	Rubber		Nominal belt pull, straight		Nominal belt pull, curve		Weight		Width deviation	Temperature		Certificates[2]		
Material	Color	Material	Material	Color	[N/mm]	[lb/ft]	[N]	[lb]	[kg/m²]	[lb/ft²]	[%]	[°C]	[°F]	FDA	EU	MHLW
POM-CR-PP	BL	SS	R7	BG	18	1233	2100	472	11.4	2.33	0.0	5/90	-49/194	●	●	
POM-CR-PP	WT	SS	R7	BG	18	1233	2100	472	11.4	2.33	0.0	5/90	-49/194	●	●	
POM-CR-PP	BL	SS	R7	BK	18	1233	2100	472	11.4	2.33	0.0	5/90	-49/194	●	●	

BG (Beige), BK (Black), BL (Blue), WT (White)

All measurements and tolerances apply at 21 °C; for temperature deviations please see Prolink manual chapter 4.4 "Temperature influence".
All imperial dimensions (inches) are rounded off.

[1] Flex radii: r1 = side flex, r2 = front flex on roller, r3 = back flex on load bearing roller, r4 = back flex on Hold Down shoe, r5 = back flex on roller
Attention: Restrictions on sprocket size and corresponding shaft options – please check sprocket data sheet

[2] Complies with FDA 21 CFR | Complies with (EU) 10/2011 and (EC) 1935/2004 regulations regarding the raw materials used and the migration thresholds | Complies with Japanese MHLW Notification 370
● = available | – = not available | empty cells = not tested

[3] More materials and colors on request

S5-45 GRT ST | 45 % Opening | Grid top · strong

Excellent air circulation and drainage | Lattice shaped surface (Largest opening: Ø = 13.0 mm/0.51 in) | Version with reinforced brick-laid side modules (75 mm/2.9 in and 100 mm/3.9 in) increases belt pull capacity | Collapse factor (C_C) = 2.0

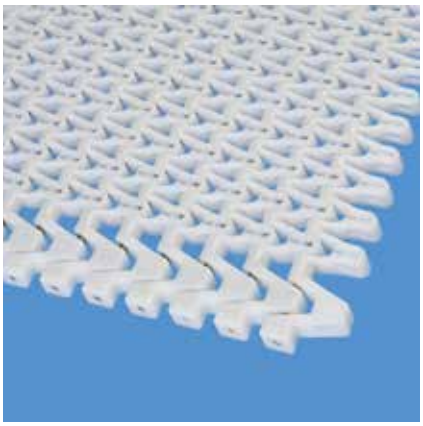

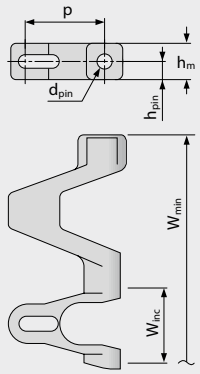

Variant specific dimensions [mm (in)]

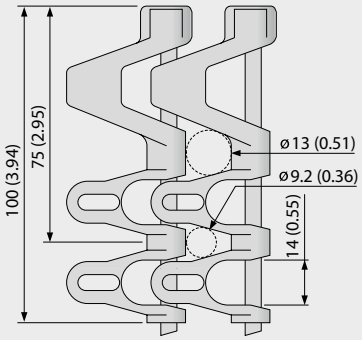

Belt dimensions

	p	d_{pin}	h_m	h_{pin}	h_s	W_{min}	W_{inc}	W_{tol}	Minimum flex radii[1]			
	Pitch	Pin Ø	Thickness	Pin position	Height	Width min.	Width Increment	Width tolerance [%]	r1 $C_c \times W_B$	r2	r3	r4	r5
mm	25.0	5.0	12.0	6.0	0.0	175.0	25.0	±0.3	2 x W_B	25.0	50.0	75.0	25.0
inch	0.98	0.2	0.47	0.24	0.0	6.89	0.98	±0.3	2 x W_B	0.98	1.97	2.95	0.98

W_B = Belt width, further information regarding r1 see page III-31

Available standard materials [3]

Belt		Pin	Nominal belt pull, straight		Nominal belt pull, curve		Weight		Width deviation	Temperature		Certificates[2]		
Material	Color	Material	[N/mm]	[lb/ft]	[N]	[lb]	[kg/m²]	[lb/ft²]	[%]	[°C]	[°F]	FDA	EU	MHLW
POM-CR	WT	SS	25	1713	2100	472	13.2	2.7	0.0	-45/90	-49/194	●	●	●
POM-CR	BL	SS	25	1713	2100	472	13.2	2.7	0.0	-45/90	-49/194	●	●	●
PP	WT	SS	18	1233	1200	270	10.2	2.09	0.0	5/100	41/212	●	●	●
PP	BL	SS	18	1233	1200	270	10.2	2.09	0.0	5/100	41/212	●	●	●
Mold to order belts														
PA*	BL	SS	20	1370	1680	378	13.0	2.66	0.0	-40/120	-40/248	●	●	●
PE	WT	SS	10	685	NR	NR	11.1	2.27	0.0	-70/65	-94/149	●	●	●
POM-CR	DB	SS	25	1713	2100	472	13.2	2.7	0.0	-45/90	-49/194	●	●	●
PP	DB	SS	18	1233	1200	270	10.2	2.09	0.0	5/100	41/212	●	●	●

NR = not recommended

* Values valid for dry applications (RH <50 %). Belts in PA material will absorb water in wet environments, causing them to expand and reduce the nominal belt pull capacity.

BL (Blue), DB (Dark blue), WT (White)

All measurements and tolerances apply at 21 °C; for temperature deviations please see Prolink manual chapter 4.4 "Temperature influence".
All imperial dimensions (inches) are rounded off.

[1] Flex radii: r1 = side flex, r2 = front flex on roller, r3 = back flex on load bearing roller, r4 = back flex on Hold Down shoe, r5 = back flex on roller

[2] Complies with FDA 21 CFR | Complies with (EU) 10/2011 and (EC) 1935/2004 regulations regarding the raw materials used and the migration thresholds | Complies with Japanese MHLW Notification 370
● = available | – = not available | empty cells = not tested

[3] More materials and colors on request

SERIES 5 | **BELT TYPES**

Side flexing and spiral belt | Pitch 25 mm (0.98 in) | $C_C = 2.0$

S5-45 NTP ST | 45 % Opening | Nub top (round studs) · strong

Excellent air circulation and drainage | With round studs for increased grip (8 % contact area, largest opening: Ø = 13.0 mm/ 0.51 in) | Version with reinforced brick-laid side modules increases belt pull capacity | Side modules only available without NTP-pattern | Collapse factor (C_C) = 2.0

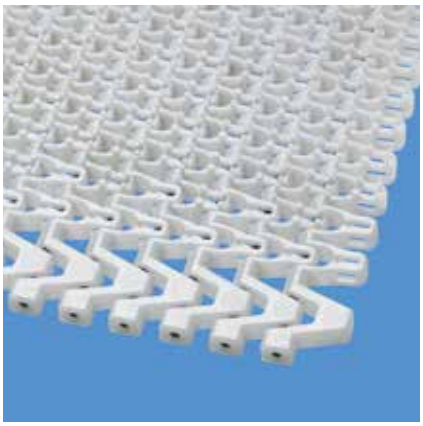

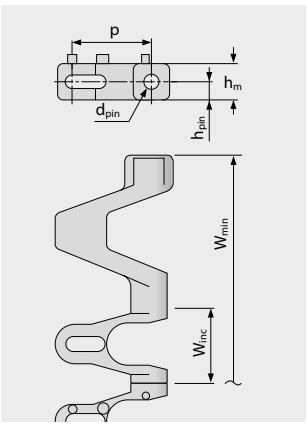

Variant specific dimensions [mm (in)]

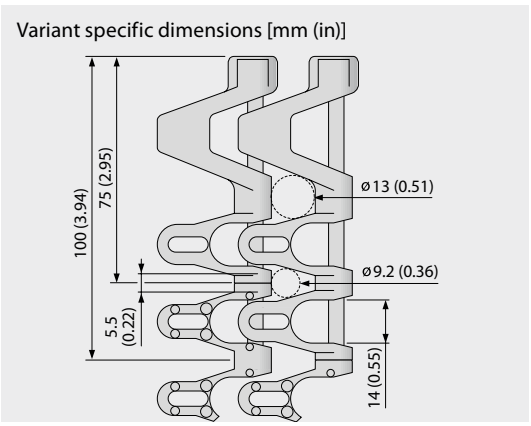

Belt dimensions

	p	d_{pin}	h_m	h_{pin}	h_s	W_{min}	W_{inc}	W_{tol}	Minimum flex radii[1]			
	Pitch	Pin Ø	Thickness	Pin position	Height	Width min.	Width Increment	Width tolerance [%]	r1 $C_c \times W_B$	r2	r3	r4	r5
mm	25.0	5.0	12.0	6.0	3.0	175.0	25.0	±0.3	2 x W_B	25.0	50.0	75.0	25.0
inch	0.98	0.2	0.47	0.24	0.12	6.89	0.98	±0.3	2 x W_B	0.98	1.97	2.95	0.98

W_B = Belt width, further information regarding r1 see page III-31

Mold to order belts [3]

Belt		Pin	Nominal belt pull, straight		Nominal belt pull, curve		Weight		Width deviation	Temperature		Certificates[2]		
Material	Color	Material	[N/mm]	[lb/ft]	[N]	[lb]	[kg/m²]	[lb/ft²]	[%]	[°C]	[°F]	FDA	EU	MHLW
PP	WT	SS	18	1233	1200	270	10.2	2.09	0.0	5/100	41/212	●	●	●

☐ WT (White)

All measurements and tolerances apply at 21 °C; for temperature deviations please see Prolink manual chapter 4.4 "Temperature influence".
All imperial dimensions (inches) are rounded off.

[1] Flex radii: r1 = side flex, r2 = front flex on roller, r3 = back flex on load bearing roller, r4 = back flex on Hold Down shoe, r5 = back flex on roller

[2] Complies with FDA 21 CFR | Complies with (EU) 10/2011 and (EC) 1935/2004 regulations regarding the raw materials used and the migration thresholds | Complies with Japanese MHLW Notification 370

● = available | – = not available | empty cells = not tested

[3] More materials and colors on request

MOVEMENT SYSTEMS

S5-39 FRT1 ST | 39 % Opening | Friction top (Design 1) · strong

Excellent air circulation and drainage | Integrated friction pads (raised) increase surface friction and provide gentle grip (Largest opening: Ø = 13.0 mm/0.51 in) | Reinforced side modules increase belt pull capacity | Side modules without FRT-surface | Collapse factor (C_C) = 2.0

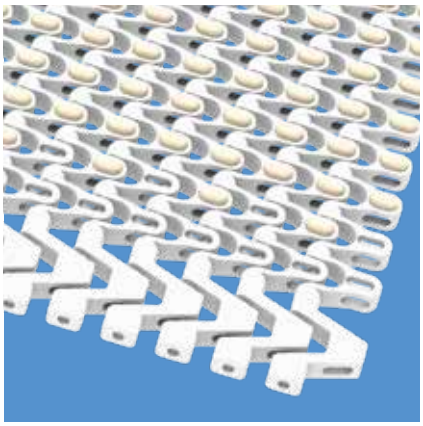

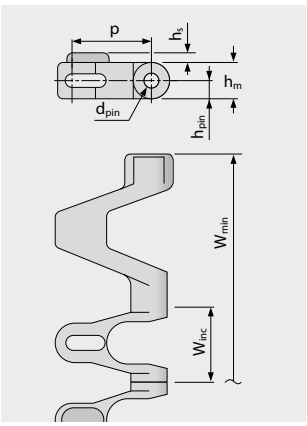

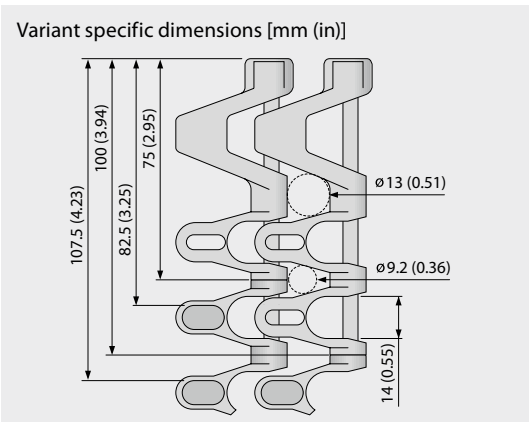

Belt dimensions

	p	d_{pin}	h_m	h_{pin}	h_s	W_{min}	W_{inc}	W_{tol}	Minimum flex radii[1]				
	Pitch	Pin Ø	Thickness	Pin position	Height	Width min.	Width Increment	Width tolerance [%]	r1 $C_c \times W_B$	r2	r3	r4	r5
mm	25.0	5.0	12.0	6.0	3.2	175.0	25.0	±0.3	2 x W_B	25.0	50.0	75.0	25.0
inch	0.98	0.2	0.47	0.24	0.13	6.89	0.98	±0.3	2 x W_B	0.98	1.97	2.95	0.98

W_B = Belt width, further information regarding r1 see page III-31

Available standard materials [3]

Belt		Pin	Rubber		Nominal belt pull, straight		Nominal belt pull, curve		Weight		Width deviation	Temperature		Certificates[2]		
Material	Color	Material	Material	Color	[N/mm]	[lb/ft]	[N]	[lb]	[kg/m²]	[lb/ft²]	[%]	[°C]	[°F]	FDA	EU	MHLW
POM-CR-PP	WT	SS	R4	BG	18	1233	2100	472	10.5	2.15	0.0	5/90	41/194			
PP	WT	SS	R4	BG	18	1233	1200	270	10.2	2.09	0.0	5/100	41/212			

BG (Beige), WT (White)

All measurements and tolerances apply at 21 °C; for temperature deviations please see Prolink manual chapter 4.4 "Temperature influence".
All imperial dimensions (inches) are rounded off.

[1] Flex radii: r1 = side flex, r2 = front flex on roller, r3 = back flex on load bearing roller, r4 = back flex on Hold Down shoe, r5 = back flex on roller

[2] Complies with FDA 21 CFR | Complies with (EU) 10/2011 and (EC) 1935/2004 regulations regarding the raw materials used and the migration thresholds | Complies with Japanese MHLW Notification 370

● = available | – = not available | empty cells = not tested

[3] More materials and colors on request

S5-33 FRT2 ST | 33 % Opening | Friction top (Design 2) · strong

Open area (33 % for full FRT2 surface area) for excellent air circulation and drainage | 47 % contact area (Largest opening: Ø = 13.0 mm/0.51 in) | Lattice shaped surface | Version with reinforced brick-laid side modules increases belt pull capacity | Collapse factor (C_C) = 2.0

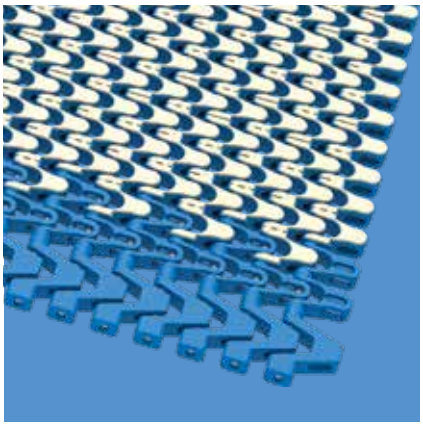

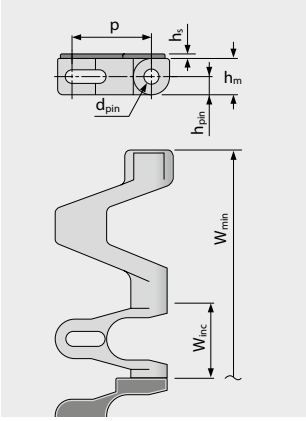

Variant specific dimensions [mm (in)]

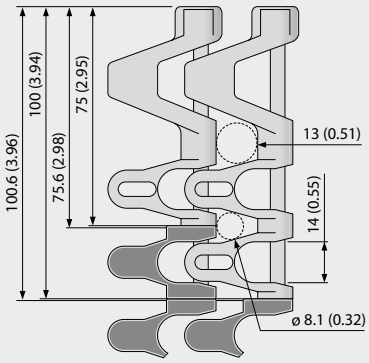

Belt dimensions

	p	d_{pin}	h_m	h_{pin}	h_s	W_{min}	W_{inc}	W_{tol}	Minimum flex radii[1]			
	Pitch	Pin Ø	Thickness	Pin position	Height	Width min.	Width Increment	Width tolerance [%]	r1 $C_c \times W_B$	r2	r3	r4	r5
mm	25.0	5.0	12.0	6.0	1.5	175.0	25.0	±0.3	2 x W_B	25.0	50.0	75.0	25.0
inch	0.98	0.2	0.47	0.24	0.06	6.89	0.98	±0.3	2 x W_B	0.98	1.97	2.95	0.98

W_B = Belt width, further information regarding r1 see page III-31

Available standard materials [3]

Belt		Pin	Rubber		Nominal belt pull, straight		Nominal belt pull, curve		Weight		Width deviation	Temperature		Certificates[2]		
Material	Color	Material	Material	Color	[N/mm]	[lb/ft]	[N]	[lb]	[kg/m²]	[lb/ft²]	[%]	[°C]	[°F]	FDA	EU	MHLW
POM-CR-PP	BL	SS	R7	BG	18	1233	2100	472	12.0	2.46	0.0	5/90	41/194	●	●	
POM-CR-PP	WT	SS	R7	BG	18	1233	2100	472	12.0	2.46	0.0	5/90	41/194	●	●	
POM-CR-PP	BL	SS	R7	BK	18	1233	2100	472	12.0	2.46	0.0	5/90	41/194	●	●	
PP	BL	SS	R7	BG	18	1233	1200	270	11.4	2.33	0.0	5/100	41/212	●	●	
PP	WT	SS	R7	BG	18	1233	1200	270	11.4	2.33	0.0	5/100	41/212	●	●	
PP	BL	SS	R7	BK	18	1233	1200	270	11.4	2.33	0.0	5/100	41/212	●	●	

Comment: ST types combinable with standard center curve modules, NTP, FRT.
ST types not combinable with Guided (G), Side Guards (SG) or Bearing Tab (BT). Please contact us should you require small curve radii.

BG (Beige), BK (Black), BL (Blue), WT (White)

All measurements and tolerances apply at 21 °C; for temperature deviations please see Prolink manual chapter 4.4 "Temperature influence".
All imperial dimensions (inches) are rounded off.

[1] Flex radii: r1 = side flex, r2 = front flex on roller, r3 = back flex on load bearing roller, r4 = back flex on Hold Down shoe, r5 = back flex on roller

[2] Complies with FDA 21 CFR | Complies with (EU) 10/2011 and (EC) 1935/2004 regulations regarding the raw materials used and the migration thresholds | Complies with Japanese MHLW Notification 370
● = available | – = not available | empty cells = not tested

[3] More materials and colors on request

S5 COMBO | **BELT TYPES**

siegling prolink
modular belts

Side flexing belt | Pitch 25 mm (0.98 in) | $C_C = 1.45$

S5 ST/S11-45 GRT CW | 45 % Opening | Grid top | Clockwise or right hand curve

Combination of high belt pull capacity and small radii in one directional curve layouts | Excellent air circulation and drainage | 42 % contact area (Largest opening: Ø = 13 mm/0.51 in) | Lattice shaped surface | SS pins for high stiffness | Collapse factor (C_C) = 1.45

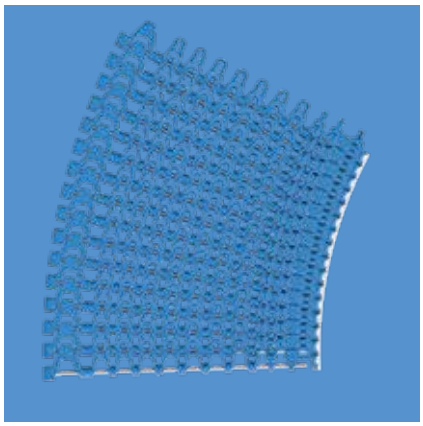

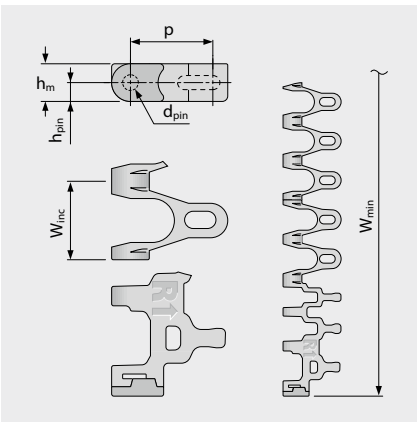

Variant specific dimensions [mm (in)]

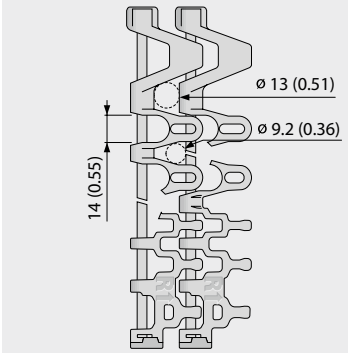

Belt dimensions

	p	d_{pin}	h_m	h_{pin}	h_s	W_{min}	W_{inc}	W_{tol}	Minimum flex radii[1]			
	Pitch	Pin Ø	Thickness	Pin position	Height	Width min.	Width Increment	Width tolerance [%]	r1 $C_c \times W_B$	r2	r3	r4	r5
mm	25.0	5.0	12.0	6.0	0.0	175.0	25.0	±0.3	1.45 x W_B	25.0	50.0	75.0	25.0
inch	0.98	0.2	0.47	0.24	0.0	6.89	0.98	±0.3	1.45 x W_B	0.98	1.97	2.95	0.98

W_B = Belt width, further information regarding r1 see page III-31

Available standard materials [3]

Belt		Pin	Nominal belt pull, straight		Nominal belt pull, curve		Weight		Width deviation	Temperature		Certificates[2]		
Material	Color	Material	[N/mm]	[lb/ft]	[N]	[lb]	[kg/m²]	[lb/ft²]	[%]	[°C]	[°F]	FDA	EU	MHLW
POM-CR	WT	SS	25	1713	2100	472	13.2	2.70	0.0	-45/90	-49/194	●	●	●
POM-CR	BL	SS	25	1713	2100	472	13.2	2.70	0.0	-45/90	-49/194	●	●	●
PP	WT	SS	18	1233	1200	270	10.2	2.09	0.2	5/100	41/212	●	●	●
PP	BL	SS	18	1233	1200	270	10.2	2.09	0.2	5/100	41/212	●	●	●
Mold to order belts														
PA*	BL	SS	20	1370	1680	378	13.0	2.66	0.6	-40/120	-40/248	●	●	●

* Values valid for dry applications (RH <50 %). Belts in PA material will absorb water in wet environments, causing them to expand and reduce the nominal belt pull capacity.

BL (Blue), WT (White)

All measurements and tolerances apply at 21 °C; for temperature deviations please see Prolink manual chapter 4.4 "Temperature influence".
All imperial dimensions (inches) are rounded off.

[1] Flex radii: r1 = side flex, r2 = front flex on roller, r3 = back flex on load bearing roller, r4 = back flex on Hold Down shoe, r5 = back flex on roller

[2] Complies with FDA 21 CFR | Complies with (EU) 10/2011 and (EC) 1935/2004 regulations regarding the raw materials used and the migration thresholds | Complies with Japanese MHLW Notification 370
● = available | – = not available | empty cells = not tested

[3] More materials and colors on request

forbo
MOVEMENT SYSTEMS

S5-45 GRT BT / S5-45 GRT BT ASM | 45 % Opening | Bearing Tab Module*

Ball-bearing support to minimize friction force at the belt edge (high speed, reduce dust, save energy) | Collapse factor (C_C) = 2.0

* S5-45 GRT BT modules will be delivered without ball-bearings. S5-45 GRT BT ASM will be delivered with ball-bearings.



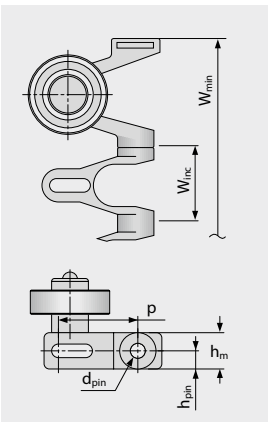

Variant specific dimensions [mm (in)]

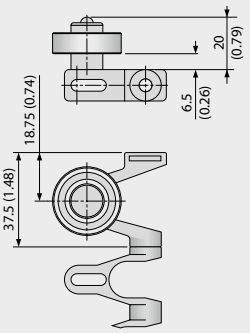

Standard configuration:
BT in every 3rd row
(minimum every 2nd row)

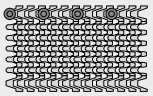

CW or CCW

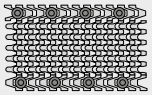

S-Curve

Belt dimensions

	p	d_{pin}	h_m	h_{pin}	h_s	W_{min}	W_{inc}	W_{tol}	Minimum flex radii[1]			
	Pitch	Pin Ø	Thickness	Pin position	Height	Width min.	Width Increment	Width tolerance [%]	r1 $C_c \times W_B$	r2	r3	r4	r5
mm	25.0	5.0	12.0	6.0	0.0	100.0	25.0	±0.3	2 x W_B	50.0	50.0	75.0	25.0
inch	0.98	0.2	0.47	0.24	0.0	3.94	0.98	±0.3	2 x W_B	1.97	1.97	2.95	0.98

W_B = Belt width, further information regarding r1 see page III-31

Available standard materials [3]

Belt		Pin	Nominal belt pull, straight		Nominal belt pull, curve		Weight**		Width deviation	Temperature		Certificates[2]		
Material	Color	Material	[N/mm]	[lb/ft]	[N]	[lb]	[kg/m²]	[lb/ft²]	[%]	[°C]	[°F]	FDA	EU	MHLW
POM-CR	BL	SS	25	1713	1800	405	13.0	2.66	0.0	-45/90	-49/194	●	●	●
Mold to order belts														
POM-CR	DB	SS	25	1713	1800	405	13.0	2.66	0.0	-45/90	-49/194	●	●	●

** Belt weight: Please calculate 18 g extra for each ball-bearing

Additional information

Compatible belt types: S5-45 GRT / NTP / (FRT1 / FRT2 in PP)
Friction coefficient in curve: 0.04
Standard belt configuration: BT in every 3rd row (min. every 2nd row). CCW and CW –> BT on the outside of the curve. S-curve –> BT on both sides. Reduced spacing will improve smooth belt running behaviour
Smallest sprocket size: Depends on belt configuration (BT every 2nd row –> min. sprocket Z11 – only with RD hub)
Ball-bearing: Recommended Ball-bearing DIN 625-6000 2RS (or similar)

■ DB (Dark blue)

All measurements and tolerances apply at 21 °C; for temperature deviations please see Prolink manual chapter 4.4 "Temperature influence".
All imperial dimensions (inches) are rounded off.

[1] Flex radii: r1 = side flex, r2 = front flex on roller, r3 = back flex on load bearing roller, r4 = back flex on Hold Down shoe, r5 = back flex on roller

[2] Belt without ball-bearing: Complies with FDA 21 CFR | Complies with (EU) 10/2011 and (EC) 1935/2004 regulations regarding the raw materials used and the migration thresholds | Complies with Japanese MHLW Notification 370
● = available | – = not available | empty cells = not tested

[3] More materials and colors on request

S5 SPR | Sprockets



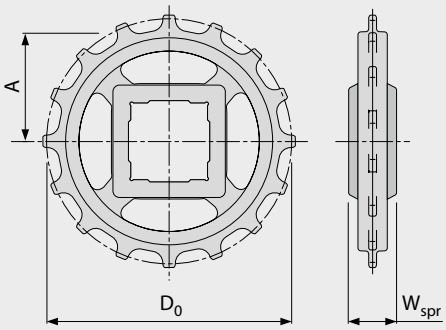

Main dimensions

Sprocket size (Number of teeth)		Z6	Z9	Z11	Z12	Z16	Z18	Z20
W_{spr}	mm	24.0	24.0	24.0	24.0	24.0	24.0	24.0
	inch	0.94	0.94	0.94	0.94	0.94	0.94	0.94
D_0	mm	49.6	72.6	88.0	95.8	127.2	142.8	158.5
	inch	1.95	2.86	3.46	3.77	5.01	5.62	6.24
A_{max}	mm	18.8	30.3	38.0	41.9	57.6	65.4	73.3
	inch	0.74	1.19	1.50	1.65	2.27	2.57	2.89
A_{min}	mm	16.3	28.5	36.5	40.5	56.5	64.4	72.4
	inch	0.64	1.12	1.44	1.59	2.22	2.54	2.85

Shaft bores (● = Round, ■ = Square; ❍ or ❑ = mold to order; * = not possible with S5 RG and G belts)

25	mm		● / ■*	●	● / ■	●	●	❍
30	mm		● / ■*	●	●	●	●	●
40	mm			■*	● / ■	❍ / ■	● / ■	❍ / ■
0.75	inch	●*						
1	inch		● / ❑*	●	● / ❑	●	❍	●
1.25	inch		❍ / ❑*	❍	●	●	❍	●
1.5	inch			■*	● / ■	● / ■	❍ / ■	● / ■

Material: PA, Color: LG

LG (Light gray)

All measurements and tolerances apply at 21 °C.
All imperial dimensions (inches) are rounded off.
For detailed sprocket and shaft dimensions see appendix 6.3
Number of sprockets (sprocket spacing distance) see chapter 3.2
Sprocket installation see chapter 5.2

S5-45 GRT PMC

Open version (45 %) base module for drainage



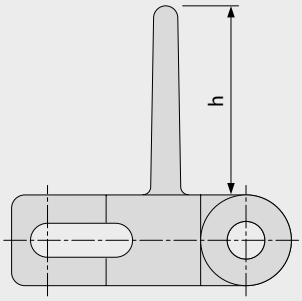

Basic data

Material	Color	Height (h)	
		25 mm 1 inch	50 mm 2 inch
PE	WT	●	●
POM	BL	●	●
POM	DB	mold to order	mold to order
POM	UC	mold to order	mold to order
POM	WT	●	●
PP	DB	mold to order	mold to order
PP	WT	●	●

Molded width: 100 mm (3.9 in)

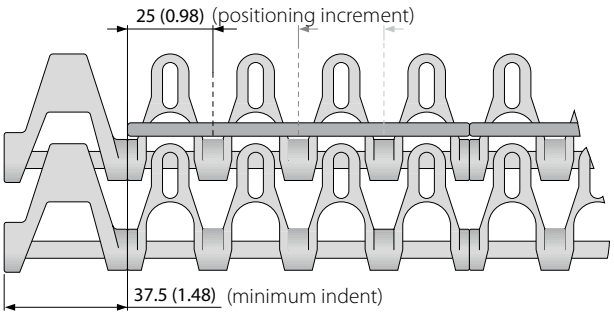

PMC also available
for G, RG, ST types.

G = Indent 37.5 (1.48)
RG = Indent 50 (1.97)
ST = Indent 75 (2.95)

BL (Blue), DB (Dark blue), UC (Uncolored), WT (White)

All measurements and tolerances apply at 21 °C; for temperature deviations please see Prolink manual chapter 4.4 "Temperature influence".
All imperial dimensions (inches) are rounded off.
Note: Use of accessory in a belt may impact on the minimum design radii. Please see chapter 6.3 for further information.

SERIES 5 | **SIDE GUARDS**

siegling prolink
modular belts

Side flexing and spiral belt | Pitch 25 mm (0.98 in)

S5 SG | Side guards

For retention of bulk products

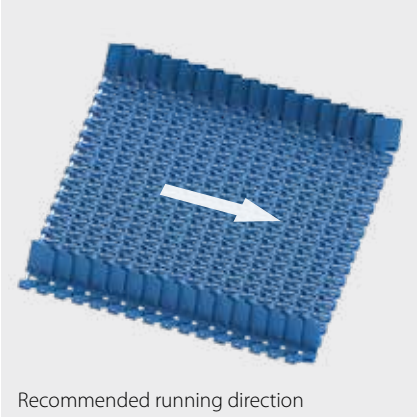

Recommended running direction



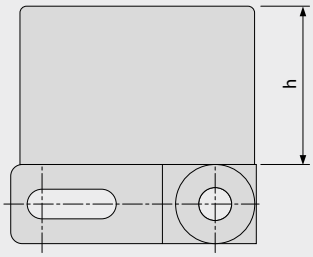

Basic data

Material	Color	Height (h)	
		25 mm 1 inch	50 mm 2 inch
POM-CR	BL	●	●
POM-CR	WT	mold to order	mold to order

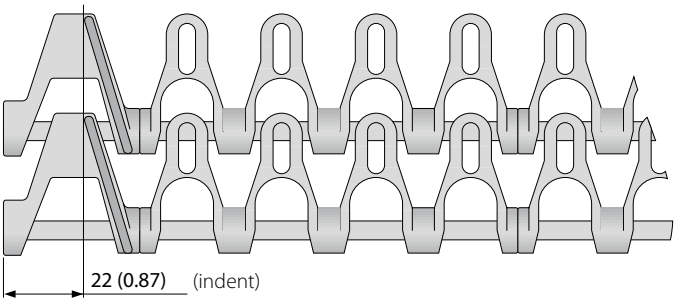

BL (Blue), WT (White)

All measurements and tolerances apply at 21 °C; for temperature deviations please see Prolink manual chapter 4.4 "Temperature influence".
All imperial dimensions (inches) are rounded off.
Note: Use of accessory in a belt may impact on the minimum design radii. Please see chapter 6.3 for further information.

Forbo
MOVEMENT SYSTEMS

SERIES 5 | **INSTALLATION NOTES**

Side flexing and spiral belt | Pitch 25 mm (0.98 in)

Preferred travel direction

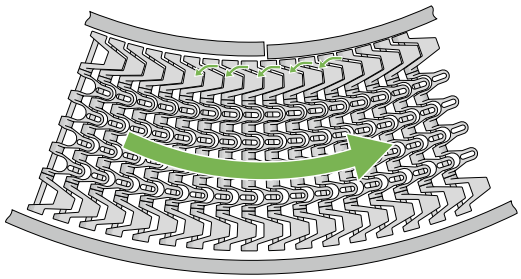

Curve conveyor

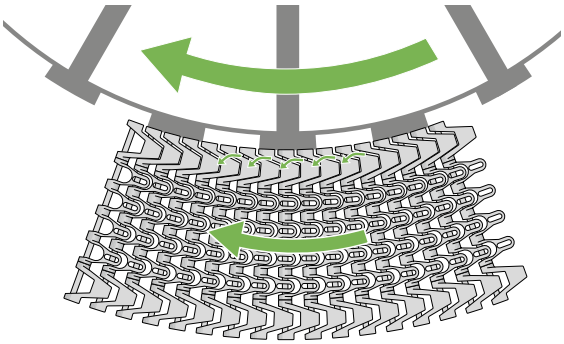

Cage driven spiral

Curve direction S5 -> CW (ClockWise) and CCW (Counter ClockWise)

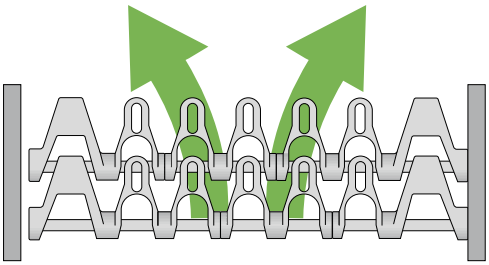

Curve direction S5 ST/S11 Combo -> Belt CW Clockwise

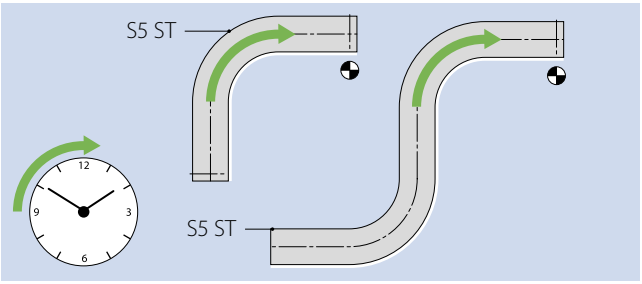

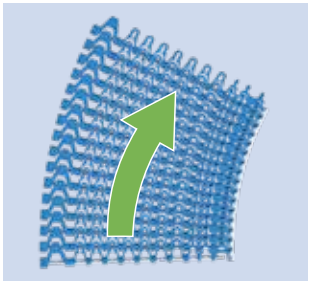

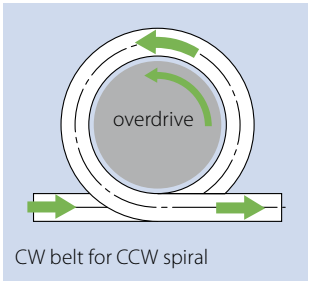

CW belt for CCW spiral

Sprocket installation

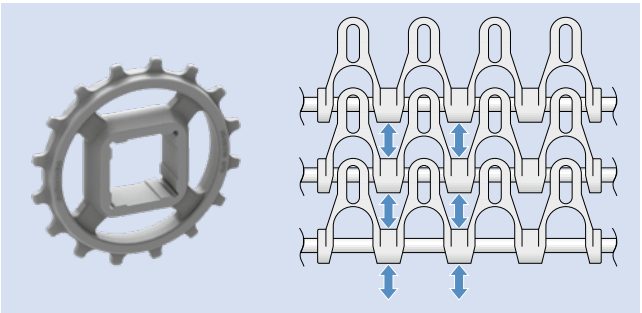

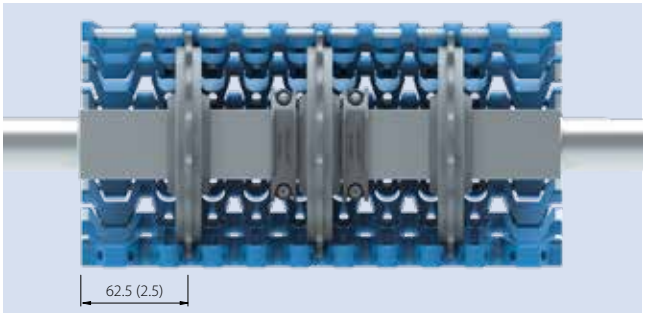



Further information in chapter 3 and 5

MOVEMENT SYSTEMS

LEGEND

① Series
S1 … S19

② Open area/Sprocket size
Percentage open area Format: xx E.g. 20 = 20 %
For sprockets: number of teeth Format: "Z"xx E.g. Z12 = 12 teeth

③ Surface pattern	
BSL	Base module for slider
CTP	Cone top
CUT	Curved top
FLT	Flat top (smooth)
FRT-OG	Friction top without High Grip insert
FRT(X)	Friction top (Design X)
GRT	Grid top
HDK	High Deck
LRB	Lateral rib
MOD	Modified module shape
NCL	No cling
NPY	Negative pyramid
NSK	Non skid
NSK2	Non skid, nonwoven variant
NTP	Nub top (round studs)
PRR	Pin Retained Rollers
RAT	Radius top
RRB	Raised rib
RSA	Reduced surface area
RTP	Roller top
SRS	Slip-resistant surface

④ Type	
BPU	Bucket profile
CAP	Pin lock & belt edge sealing
CCW	Counter clockwise
CLP	Clip
CM	Center module
CW	Clockwise
FPL	Finger plate
HDT	Hold Down Tab
IDL	Idler
INS	Insert
PIN	Coupling rod
PMC	Profile module center
PMU	Profile module universal
PSP	ProSnap
PSU-0	Prof. scoop uni. closed
PSU-X	Prof. scoop uni. x% open
RI	High Grip insert
REL	Reinforcement Link (SS)
ROL	Rollers
RTR	Retaining ring
SG	Module with sideguard
SGL	Side guard, left
SGR	Side guard, right
SLI	Slider
SMA	Side module, A side
SMB	Side module, B side
SML	Side module, left
SMR	Side module, right
SMT	Side module, tight radius
SMU	Side module, universal/both sides
SPR	Sprocket
SPR-SP	Split sprocket, 2-part
SSL	Self stacker side module, left
SSR	Self stacker side module, right
TPL	Turning panel, left
TPR	Turning panel, right
UM	Universal module
WSC	Wheel Stopper Center
WSS	Wheel Stopper Side

⑤ Style	
1.6	1.6 collapse factor
1.7	1.7 collapse factor
2.2	2.2 collapse factor
2.2 G	2.2 collapse factor, guided
A90	Angle 90° to conveying direction
BT	Bearing tab
DR	Double row sprocket
F1, F2, F3 …	Collapse factor modules
G	Guided
GT	Guiding tabs
HD	Hold Down
HR	Hard removable pin
Ixx	xx = indent in mm
RG	Reversed guided
SG	Side guard
SP	Split sprocket
ST	Strong
V2	Version 2 indicates a design update

⑥ Material	
PA	Polyamide
PA-FR	Polyamide flame retadant
PA-FRHC	Polyamide, flame retadant, high conductive
PA-HT	Polyamide high temperature
PBT	Polybutylenterephthalate
PE	Polyethylene
PE-I	PE impact resistant
PE-MD	PE metal detectable
PK	Wear & impact improved polymer
PLX	Special PK for pins with small diameter – higher stiffness
POM	Polyoxymethylene (Polyacetal)
POM-CR	POM cut resistant
POM-HC	POM highly conductive
POM-MD	POM metal detectable
POM-PE	POM side modules + PE center modules
POM-PP	POM side modules + PP center modules
PP	Polypropylene
PP-MD	PP metal detectable
PP-SW	PP steam and hot water resistant
PXX-HC	Self-extinguishing highly conductive material
R1	TPE 80 Shore A, PP
R2	EPDM 80 Shore A, vulcanized
R3	TPE 70 Shore A, POM
R4	TPE 86 Shore A, PP
R5	TPE 52 Shore A, PP
R6	TPE 63 Shore A, POM
R7	TPE 50 Shore A, PP
R8	TPE 55 Shore A, PE
R11	TPE 50 Shore A, POM
SER	Self-extinguishing TPE
SS	Stainless steel
SSS	Stainless steel acid resistant
TPC1	Themoplastic Copolyester
-HA	Supports the HACCP concept
HW	High Wear resistant material

⑦ Color*	
AT	Anthracite
BG	Beige
BK	Black
BL	Blue
DB	Dark blue
GN	Green
LB	Light blue
LG	Light gray
OR	Orange
RE	Red
TQ	Turquoise
UC	Uncolored
WT	White
YL	Yellow

⑧ Height/Diameter/ Bore size and style
Height in mm (in) Format: Hxxx Pin diameter in mm (in) Format: Dxxx
Bore size: SQ (= square) or RD (= round) either in mm or inches Format: SQxxMM or RDxxIN

⑨ Length/Width
Pins Length in mm (in) Format: Lxxx Module width in mm (in) Format: Wxxx REL in mm one decimal Format: Wx.x

* For each series' standard colors please refer to the table of materials for each belt (chapter 1.2). A number of other colors are available on request. Colors can vary from the original due to the print, production processes or material used.