# EXCERPT FROM PROLINK ENGINEERING MANUAL

05/26 (Ref-No. 888)

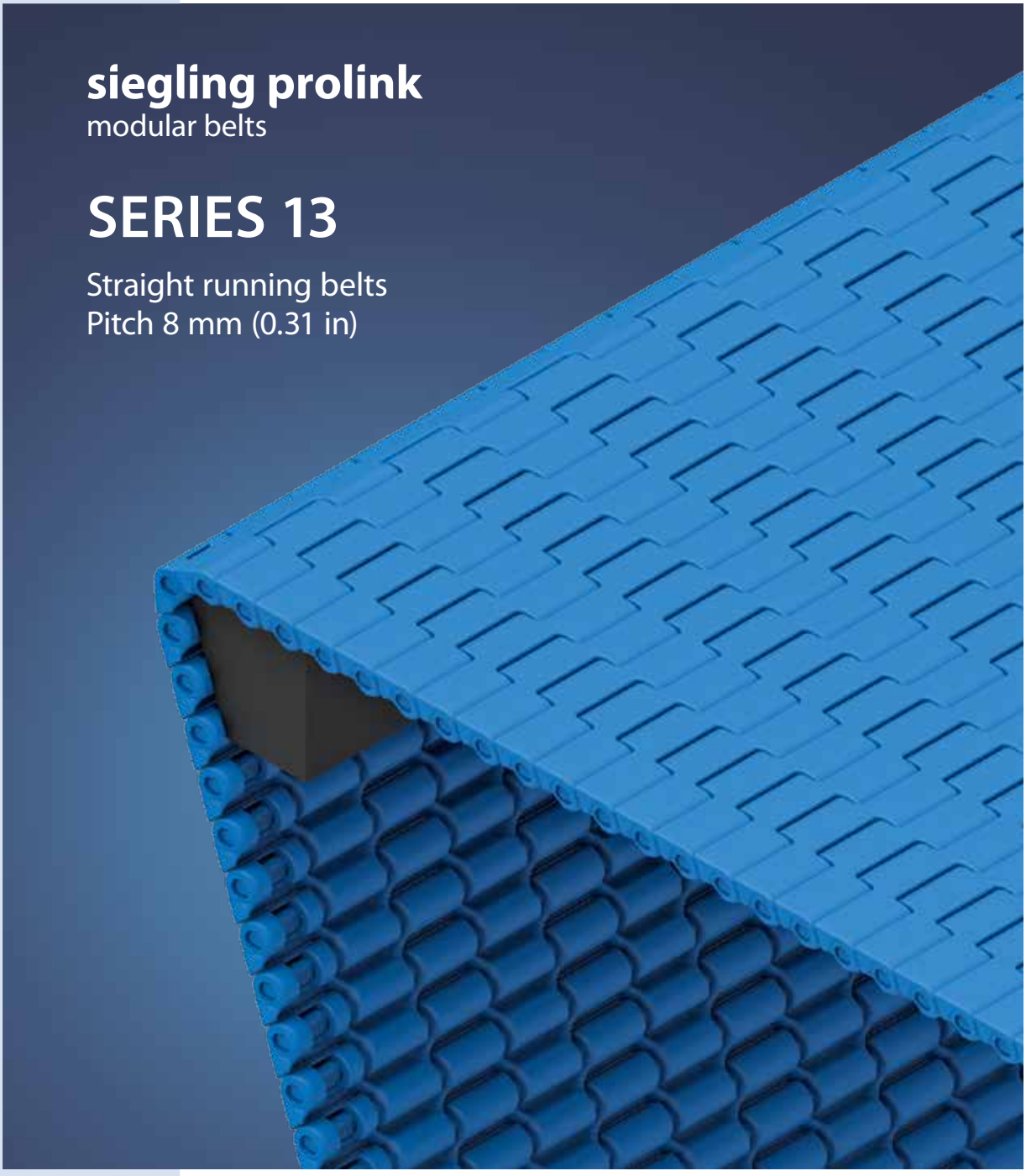


**Forbo Siegling GmbH**
Lilienthalstraße 6/8, D-30179 Hannover
Telefon +49 511 6704 0
www.forbo-siegling.com, siegling@forbo.com

Ref. no. 888-1_1.2_S13

# SERIES 13 | **OVERVIEW**

Straight running belts | Pitch 8 mm (0.31 in)

siegling prolink
modular belts

## Belts for light-duty food and non-food nose bar applications

**Side view scale 1:1**

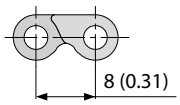


**Design characteristics**

- Micro pitch belt with small transfer gaps
- Designed to run over nosebars/knife edges or rollers with a radius down to 3 mm (0.12 in) allowing, precise transfer of even the smallest products
- Versatile for conveying, drying and cooling applications
- Optimal design of sprocket teeth, and belt underside provides superior sprocket engagement, safe belt tracking and favorable cleanability
- Belt and sprocket design ensures superior load transmission and belt pull capacity
- Headless pin making it very easy to install and remove the belt for maintenance

**Basic data**

| | |
|---|---|
| Pitch | 8 mm (0.31 in) |
| Belt width min. | 102 mm (4 in) |
| Width increments | 25.4 mm (1 in) |
| Hinge pins | 3 mm (0.12 in) made of plastic (PLX) |

**Available surface pattern and opening area**

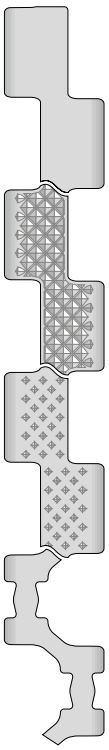

S13-0 FLT
Closed, smooth surface

S13-0 NPY
Closed surface
with negative pyramid pattern

S13-0 CTP
Closed surface and pointed studs

S13-34 FLT
Open (34 %), smooth surface

NSF Certified

NSF-compliant from these certified Forbo plants:
Huntersville (USA), Malacky (Slovakia), Tlalnepantla (Mexico)

**Sprockets**
In different sizes with round or square bore

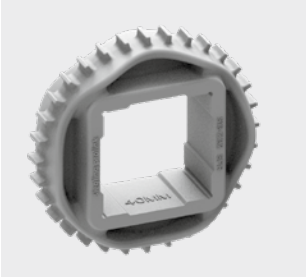

**Detail hinge pin**
Headless pin with unique shoulder design ensures trouble free installation, maintenance and a secure pin retention

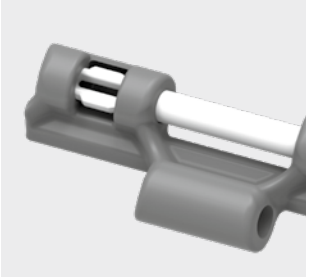

**Detail nose bar**
Narrow transfer gap ensures smooth transfer of small and delicate products

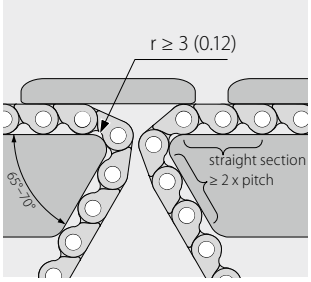


**ProSnap**
Quick-Release for easy opening and closing of the belt

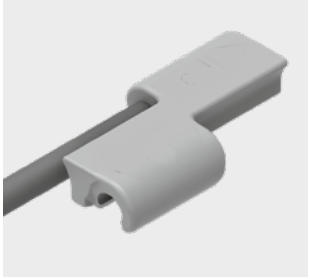

# SERIES 13 | **BELT TYPES**

siegling prolink
modular belts

Straight running belt | Pitch 8 mm (0.31 in)

## **S13-0 FLT** | 0 % Opening | Flat top

Closed, smooth surface | Flat top surface

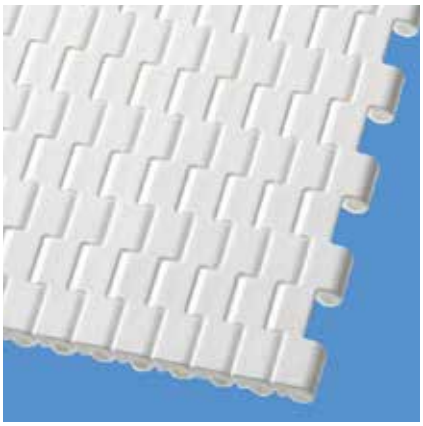

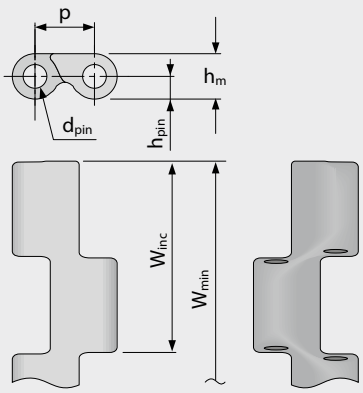


### Belt dimensions

| | p | $d_{pin}$ | $h_m$ | $h_{pin}$ | $h_s$ | $W_{min}$ | $W_{inc}$ | $W_{tol}$ | Minimum flex radii[1] | | | | |
|---|---|---|---|---|---|---|---|---|---|---|---|---|---|
| | Pitch | Pin Ø | Thickness | Pin position | Height | Width min. | Width Increment | Width tolerance [%] | r1 $C_c$ x $W_B$ | r2 | r3 | r4 | r5 |
| mm | 8.0 | 3.0 | 6.0 | 3.0 | 0.0 | 101.6 | 25.4 | ±0.2 | – | 3.0 | 16.0 | 24.0 | 8.0 |
| inch | 0.31 | 0.12 | 0.24 | 0.12 | 0.0 | 4.0 | 1.0 | ±0.2 | – | 0.12 | 0.63 | 0.94 | 0.31 |

### Available standard materials [3]

| Belt | | Pin | | Nominal belt pull, straight | | Weight | | Width deviation | Temperature | | Certificates[2] | | |
|---|---|---|---|---|---|---|---|---|---|---|---|---|---|
| Material | Color | Material | Color | [N/mm] | [lb/ft] | [kg/m²] | [lb/ft²] | [%] | [°C] | [°F] | FDA | EU | MHLW |
| PA* | BL | PLX | BL | 4 | 274 | 5.1 | 1.04 | 1.38 | -40/120 | -40/248 | ● | ● | ● |
| POM | WT | PLX | BL | 4 | 274 | 5.9 | 1.21 | 0.23 | -45/90 | -49/194 | ● | ● | ● |
| POM | BL | PLX | BL | 4 | 274 | 5.9 | 1.21 | 0.23 | -45/90 | -49/194 | ● | ● | ● |
| Mold to order belts | | | | | | | | | | | | | |
| PA* | LG | PLX | BL | 4 | 274 | 5.1 | 1.04 | 1.38 | -40/120 | -40/248 | ● | ● | ● |
| PA-HT | BL | PLX | BL | 4 | 274 | 5.7 | 1.17 | 1.77 | -30/155 | -22/311 | ● | ● | ● |
| PXX-HC | BK | PLX | BL | 2 | 137 | 5.2 | 1.07 | 0.89 | 5/100 | 41/212 | – | – | |

Mold to width available in: 102 mm (4.0 in), 152 mm (6.0 in), 203 mm (8.0 in), 305 mm (12.0 in)

* Values valid for dry applications (RH <50 %). Belts in PA material will absorb water in wet environments, causing them to expand and reduce the nominal belt pull capacity.

■ BK (Black), ■ BL (Blue), ■ LG (Light gray), □ WT (White)

All measurements and tolerances apply at 21 °C; for temperature deviations please see Prolink manual chapter 4.4 "Temperature influence".
All imperial dimensions (inches) are rounded off.

[1] Flex radii: r1 = side flex, r2 = front flex on roller, r3 = back flex on load bearing roller, r4 = back flex on Hold Down shoe, r5 = back flex on roller

[2] Complies with FDA 21 CFR | Complies with (EU) 10/2011 and (EC) 1935/2004 regulations regarding the raw materials used and the migration thresholds | Complies with Japanese MHLW Notification 370
● = available | – = not available | empty cells = not tested

[3] More materials and colors on request

Forbo
MOVEMENT SYSTEMS

# SERIES 13 | **BELT TYPES**

siegling prolink
modular belts

Straight running belt | Pitch 8 mm (0.31 in)

## **S13-0 NPY** | 0 % Opening | Negative pyramid

Closed surface with negative pyramid pattern | Provides superb release characteristics when conveying wet or sticky products | 61 % contact area

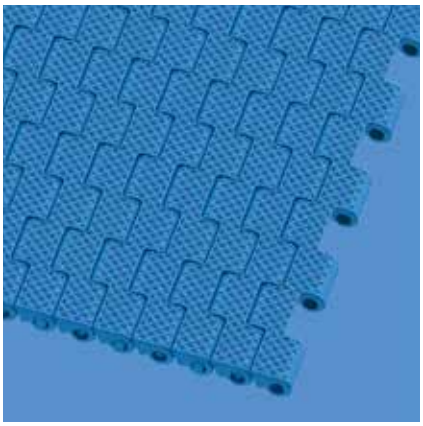

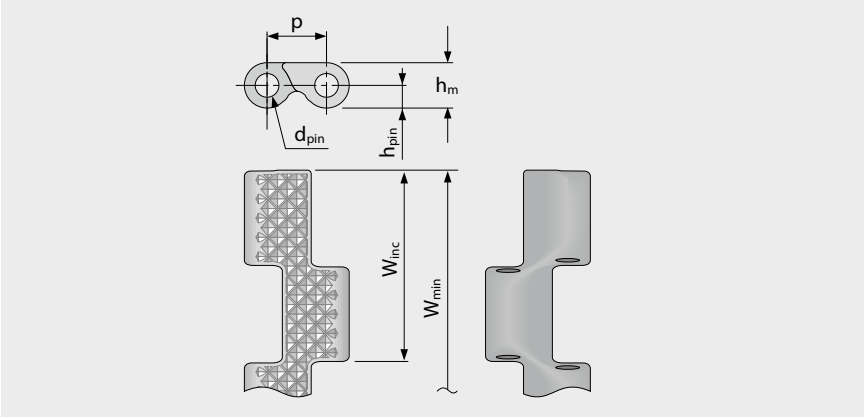


### Belt dimensions

| | p | $d_{pin}$ | $h_m$ | $h_{pin}$ | $h_s$ | $W_{min}$ | $W_{inc}$ | $W_{tol}$ | Minimum flex radii[1] | | | |
|---|---|---|---|---|---|---|---|---|---|---|---|---|
| | Pitch | Pin Ø | Thickness | Pin position | Height | Width min. | Width Increment | Width tolerance [%] | r1 $C_c$ x $W_B$ | r2 | r3 | r4 | r5 |
| mm | 8.0 | 3.0 | 6.0 | 3.0 | 0.0 | 101.6 | 25.4 | ±0.2 | – | 3.0 | 16.0 | 24.0 | 8.0 |
| inch | 0.31 | 0.12 | 0.24 | 0.12 | 0.0 | 4.0 | 1.0 | ±0.2 | – | 0.12 | 0.63 | 0.94 | 0.31 |

### Available standard materials [3]

| Belt | | Pin | | Nominal belt pull, straight | | Weight | | Width deviation | Temperature | | Certificates[2] | | |
|---|---|---|---|---|---|---|---|---|---|---|---|---|---|
| Material | Color | Material | Color | [N/mm] | [lb/ft] | [kg/m²] | [lb/ft²] | [%] | [°C] | [°F] | FDA | EU | MHLW |
| POM | BL | PLX | BL | 4 | 274 | 5.9 | 1.21 | 0.23 | -45/90 | -49/194 | ● | ● | ● |

Mold to width available in: 102 mm (4.0 in), 152 mm (6.0 in), 203 mm (8.0 in), 305 mm (12.0 in)

BL (Blue)

All measurements and tolerances apply at 21 °C; for temperature deviations please see Prolink manual chapter 4.4 "Temperature influence".
All imperial dimensions (inches) are rounded off.

[1] Flex radii: r1 = side flex, r2 = front flex on roller, r3 = back flex on load bearing roller, r4 = back flex on Hold Down shoe, r5 = back flex on roller

[2] Complies with FDA 21 CFR | Complies with (EU) 10/2011 and (EC) 1935/2004 regulations regarding the raw materials used and the migration thresholds | Complies with Japanese MHLW Notification 370

● = available | – = not available | empty cells = not tested

[3] More materials and colors on request

Forbo
MOVEMENT SYSTEMS

# SERIES 13 | **BELT TYPES**

siegling prolink
modular belts

Straight running belt | Pitch 8 mm (0.31 in)

## **S13-0 CTP** | 0 % Opening | Cone top (pointed studs)

Closed surface and pointed studs | Cone top surface pattern for superior grip

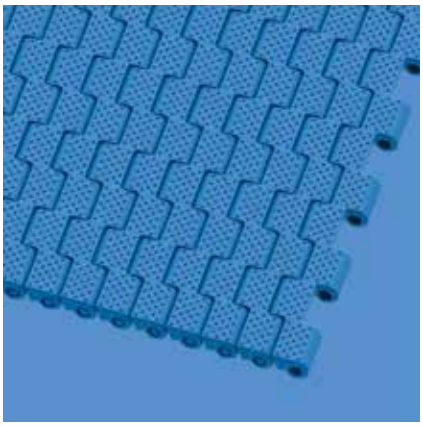

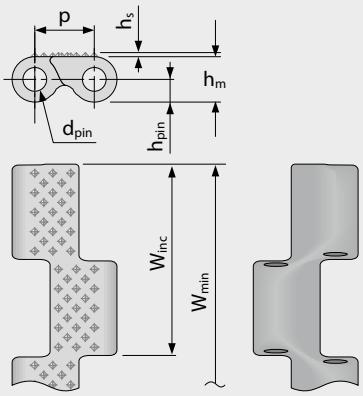


### Belt dimensions

| | p | $d_{pin}$ | $h_m$ | $h_{pin}$ | $h_s$ | $W_{min}$ | $W_{inc}$ | $W_{tol}$ | Minimum flex radii[1] | | | | |
|---|---|---|---|---|---|---|---|---|---|---|---|---|---|
| | Pitch | Pin Ø | Thickness | Pin position | Height | Width min. | Width Increment | Width tolerance [%] | r1 $C_c$ x $W_B$ | r2 | r3 | r4 | r5 |
| mm | 8.0 | 3.0 | 6.0 | 3.0 | 0.4 | 101.6 | 25.4 | ±0.2 | – | 3.0 | 16.0 | 24.0 | 8.0 |
| inch | 0.31 | 0.12 | 0.24 | 0.12 | 0.02 | 4.0 | 1.0 | ±0.2 | – | 0.12 | 0.63 | 0.94 | 0.31 |

### Available standard materials [3]

| Belt | | Pin | | Nominal belt pull, straight | | Weight | | Width deviation | Temperature | | Certificates[2] | | |
|---|---|---|---|---|---|---|---|---|---|---|---|---|---|
| Material | Color | Material | Color | [N/mm] | [lb/ft] | [kg/m²] | [lb/ft²] | [%] | [°C] | [°F] | FDA | EU | MHLW |
| POM | BL | PLX | BL | 4 | 274 | 5.9 | 1.21 | 0.23 | -45/90 | -49/194 | ● | ● | ● |
| Mold to order belts | | | | | | | | | | | | | |
| PA* | BL | PLX | BL | 4 | 274 | 5.1 | 1.04 | 1.38 | -40/120 | -40/248 | ● | ● | ● |

Mold to width available in: 305 mm (12.0 in)

* Values valid for dry applications (RH <50 %). Belts in PA material will absorb water in wet environments, causing them to expand and reduce the nominal belt pull capacity.

BL (Blue)

All measurements and tolerances apply at 21 °C; for temperature deviations please see Prolink manual chapter 4.4 "Temperature influence".
All imperial dimensions (inches) are rounded off.

[1] Flex radii: r1 = side flex, r2 = front flex on roller, r3 = back flex on load bearing roller, r4 = back flex on Hold Down shoe, r5 = back flex on roller

[2] Complies with FDA 21 CFR | Complies with (EU) 10/2011 and (EC) 1935/2004 regulations regarding the raw materials used and the migration thresholds | Complies with Japanese MHLW Notification 370

● = available | – = not available | empty cells = not tested

[3] More materials and colors on request

Forbo
MOVEMENT SYSTEMS

# SERIES 13 | **BELT TYPES**

siegling prolink
modular belts

Straight running belt | Pitch 8 mm (0.31 in)

## **S13-34 FLT** | 34 % Opening | Flat top

Open area (34 %) for excellent air circulation and drainage | 47 % contact area (Largest opening: 11.4 x 4.6 mm/0.45 x 0.18 in); Smooth surface | Easy-to-clean

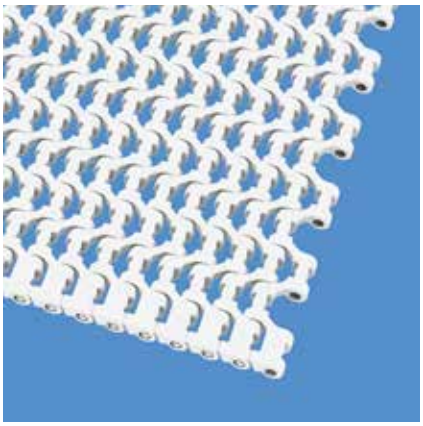

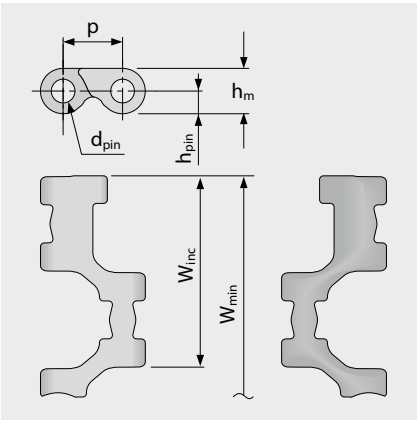


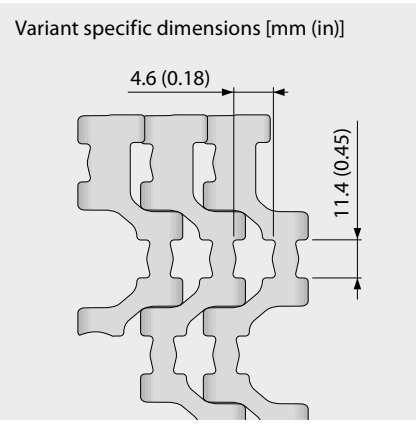


### Belt dimensions

| | p | $d_{pin}$ | $h_m$ | $h_{pin}$ | $h_s$ | $W_{min}$ | $W_{inc}$ | $W_{tol}$ | Minimum flex radii[1] | | | | |
|---|---|---|---|---|---|---|---|---|---|---|---|---|---|
| | Pitch | Pin Ø | Thickness | Pin position | Height | Width min. | Width Increment | Width tolerance [%] | r1 $C_c$ x $W_B$ | r2 | r3 | r4 | r5 |
| mm | 8.0 | 3.0 | 6.0 | 3.0 | 0.0 | 101.6 | 25.4 | ±0.2 | – | 3.0 | 16.0 | 24.0 | 8.0 |
| inch | 0.31 | 0.12 | 0.24 | 0.12 | 0.0 | 4.0 | 1.0 | ±0.2 | – | 0.12 | 0.63 | 0.94 | 0.31 |

### Available standard materials [3]

| Belt | | Pin | | Nominal belt pull, straight | | Weight | | Width deviation | Temperature | | Certificates[2] | | |
|---|---|---|---|---|---|---|---|---|---|---|---|---|---|
| Material | Color | Material | Color | [N/mm] | [lb/ft] | [kg/m²] | [lb/ft²] | [%] | [°C] | [°F] | FDA | EU | MHLW |
| PA* | BL | PLX | BL | 4 | 274 | 3.7 | 0.76 | 1.38 | -40/120 | -40/248 | ● | ● | ● |
| POM | WT | PLX | BL | 4 | 274 | 4.3 | 0.88 | 0.23 | -45/90 | -49/194 | ● | ● | ● |
| POM | BL | PLX | BL | 4 | 274 | 4.3 | 0.88 | 0.23 | -45/90 | -49/194 | ● | ● | ● |
| Mold to order belts | | | | | | | | | | | | | |
| PA-HT | BL | PLX | BL | 4 | 274 | 4.2 | 0.86 | 1.38 | -30/155 | -22/311 | ● | ● | ● |

Mold to width available in: 305 mm (12.0 in)

* Values valid for dry applications (RH <50 %). Belts in PA material will absorb water in wet environments, causing them to expand and reduce the nominal belt pull capacity.

■ BL (Blue), □ WT (White)

All measurements and tolerances apply at 21 °C; for temperature deviations please see Prolink manual chapter 4.4 "Temperature influence".
All imperial dimensions (inches) are rounded off.

[1] Flex radii: r1 = side flex, r2 = front flex on roller, r3 = back flex on load bearing roller, r4 = back flex on Hold Down shoe, r5 = back flex on roller

[2] Complies with FDA 21 CFR | Complies with (EU) 10/2011 and (EC) 1935/2004 regulations regarding the raw materials used and the migration thresholds | Complies with Japanese MHLW Notification 370

● = available | – = not available | empty cells = not tested

[3] More materials and colors on request

Forbo
MOVEMENT SYSTEMS

## **S13 SPR** | Sprockets

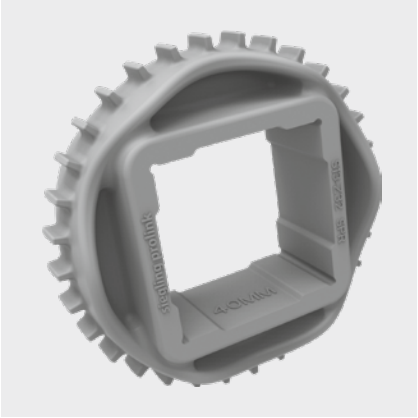

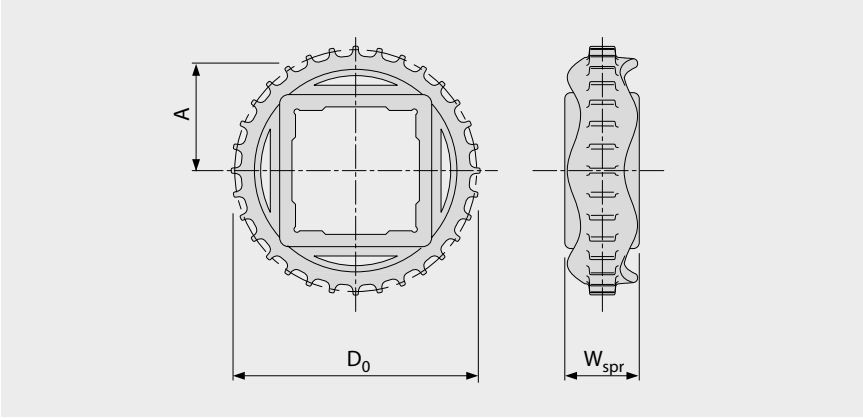


### Main dimensions

| Sprocket size (Number of teeth) | | Z15 | Z24 | Z32 | Z36 | Z48 |
|---|---|---|---|---|---|---|
| $W_{spr}$ | mm | 25.0 | 25.0 | 25.0 | 25.0 | 25.0 |
| | inch | 0.98 | 0.98 | 0.98 | 0.98 | 0.98 |
| $D_0$ | mm | 39.1 | 62.3 | 82.9 | 93.2 | 124.2 |
| | inch | 1.54 | 2.45 | 3.26 | 3.67 | 4.89 |
| $A_{max}$ | mm | 16.6 | 28.2 | 38.5 | 43.6 | 59.1 |
| | inch | 0.65 | 1.11 | 1.52 | 1.72 | 2.33 |
| $A_{min}$ | mm | 16.2 | 27.9 | 38.3 | 43.4 | 59.0 |
| | inch | 0.64 | 1.10 | 1.51 | 1.71 | 2.32 |

### **Shaft bores** (● = Round, ■ = Square)

| | | | | | | |
|---|---|---|---|---|---|---|
| 20 | mm | ● / ■ | | | | |
| 25 | mm | | ● / ■ | ● | | |
| 30 | mm | | ■ | | | |
| 40 | mm | | | ■ | ■ | ■ |
| 0.75 | inch | ● | | | | |
| 1 | inch | | ● / ■ | ● | | |
| 1.5 | inch | | | ■ | | ■ |

Material: PA, Color: LG

LG (Light gray)

All measurements and tolerances apply at 21 °C.
All imperial dimensions (inches) are rounded off.
For detailed sprocket and shaft dimensions see appendix 6.3
Number of sprockets (sprocket spacing distance) see chapter 3.2

# SERIES 13 | **PROSNAP**

siegling prolink
modular belts

Straight running belt | Pitch 8 mm (0.31 in)

## **S13-0 FLT PSP** | ProSnap

Quick-Release for easy, quick and toolless opening and closing of the belt | One pin solution for entire belt width



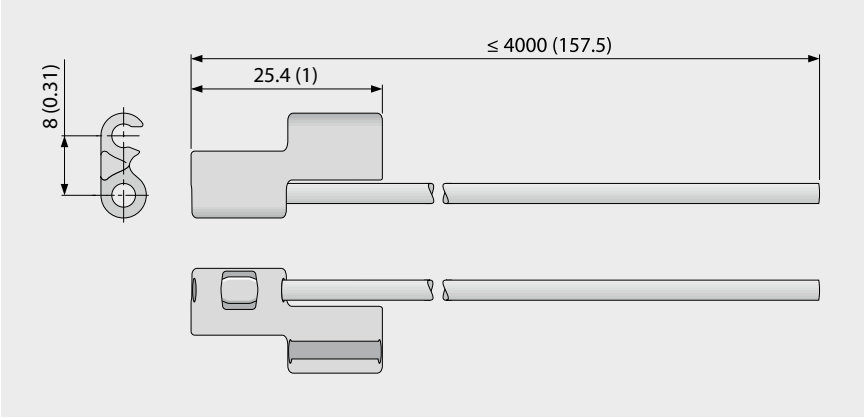


### Basic data

| Material | Color | Pin material/length | |
|---|---|---|---|
| | | ≤ 610 mm (24 inch) | > 610 mm (24 inch) ≤ 4000 mm (157 inch) |
| POM | LB | PLX | PBT |
| **Mold to order belts** | | | |
| POM-MD | BL | PLX | PBT |

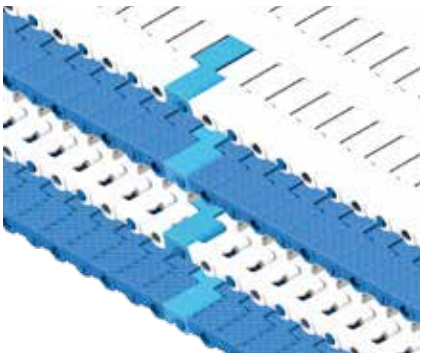

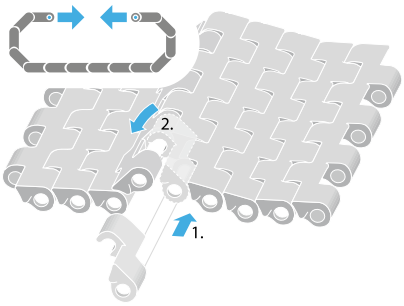


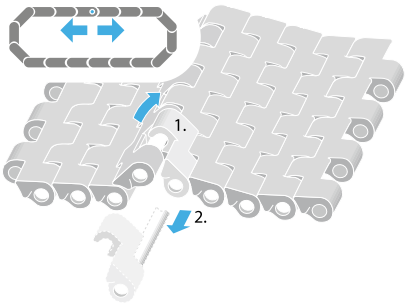


BL (Blue), LB (Light blue)

All measurements and tolerances apply at 21 °C; for temperature deviations please see Prolink manual chapter 4.4 "Temperature influence".
All imperial dimensions (inches) are rounded off.
Note: Use of accessory in a belt may impact on the minimum design radii. Please see chapter 6.3 for further information.

Forbo
MOVEMENT SYSTEMS

# LEGEND

| ① Series |
|---|
| S1 … S19 |

| ② Open area/Sprocket size |
|---|
| Percentage open area<br>Format: xx<br>E.g. 20 = 20 % |
| For sprockets: number of teeth<br>Format: "Z"xx<br>E.g. Z12 = 12 teeth |

| ③ Surface pattern | |
|---|---|
| **BSL** | Base module for slider |
| **CTP** | Cone top |
| **CUT** | Curved top |
| **FLT** | Flat top (smooth) |
| **FRT-OG** | Friction top without High Grip insert |
| **FRT(X)** | Friction top (Design X) |
| **GRT** | Grid top |
| **HDK** | High Deck |
| **LRB** | Lateral rib |
| **MOD** | Modified module shape |
| **NCL** | No cling |
| **NPY** | Negative pyramid |
| **NSK** | Non skid |
| **NSK2** | Non skid, nonwoven variant |
| **NTP** | Nub top (round studs) |
| **PRR** | Pin Retained Rollers |
| **RAT** | Radius top |
| **RRB** | Raised rib |
| **RSA** | Reduced surface area |
| **RTP** | Roller top |
| **SRS** | Slip-resistant surface |

| ④ Type | |
|---|---|
| **BPU** | Bucket profile |
| **CAP** | Pin lock & belt edge sealing |
| **CCW** | Counter clockwise |
| **CLP** | Clip |
| **CM** | Center module |
| **CW** | Clockwise |
| **FPL** | Finger plate |
| **HDT** | Hold Down Tab |
| **IDL** | Idler |
| **INS** | Insert |
| **PIN** | Coupling rod |
| **PMC** | Profile module center |
| **PMU** | Profile module universal |
| **PSP** | ProSnap |
| **PSU-0** | Prof. scoop uni. closed |
| **PSU-X** | Prof. scoop uni. x% open |
| **RI** | High Grip insert |
| **REL** | Reinforcement Link (SS) |
| **ROL** | Rollers |
| **RTR** | Retaining ring |
| **SG** | Module with sideguard |
| **SGL** | Side guard, left |
| **SGR** | Side guard, right |
| **SLI** | Slider |
| **SMA** | Side module, A side |
| **SMB** | Side module, B side |
| **SML** | Side module, left |
| **SMR** | Side module, right |
| **SMT** | Side module, tight radius |
| **SMU** | Side module, universal/both sides |
| **SPR** | Sprocket |
| **SPR-SP** | Split sprocket, 2-part |
| **SSL** | Self stacker side module, left |
| **SSR** | Self stacker side module, right |
| **TPL** | Turning panel, left |
| **TPR** | Turning panel, right |
| **UM** | Universal module |
| **WSC** | Wheel Stopper Center |
| **WSS** | Wheel Stopper Side |

| ⑤ Style | |
|---|---|
| **1.6** | 1.6 collapse factor |
| **1.7** | 1.7 collapse factor |
| **2.2** | 2.2 collapse factor |
| **2.2 G** | 2.2 collapse factor, guided |
| **A90** | Angle 90° to conveying direction |
| **BT** | Bearing tab |
| **DR** | Double row sprocket |
| **F1, F2, F3 …** | Collapse factor modules |
| **G** | Guided |
| **GT** | Guiding tabs |
| **HD** | Hold Down |
| **HR** | Hard removable pin |
| **Ixx** | xx = indent in mm |
| **RG** | Reversed guided |
| **SG** | Side guard |
| **SP** | Split sprocket |
| **ST** | Strong |
| **V2** | Version 2 indicates a design update |

| ⑥ Material | |
|---|---|
| **PA** | Polyamide |
| **PA-FR** | Polyamide flame retadant |
| **PA-FRHC** | Polyamide, flame retadant, high conductive |
| **PA-HT** | Polyamide high temperature |
| **PBT** | Polybutylenterephthalate |
| **PE** | Polyethylene |
| **PE-I** | PE impact resistant |
| **PE-MD** | PE metal detectable |
| **PK** | Wear & impact improved polymer |
| **PLX** | Special PK for pins with small diameter – higher stiffness |
| **POM** | Polyoxymethylene (Polyacetal) |
| **POM-CR** | POM cut resistant |
| **POM-HC** | POM highly conductive |
| **POM-MD** | POM metal detectable |
| **POM-PE** | POM side modules + PE center modules |
| **POM-PP** | POM side modules + PP center modules |
| **PP** | Polypropylene |
| **PP-MD** | PP metal detectable |
| **PP-SW** | PP steam and hot water resistant |
| **PXX-HC** | Self-extinguishing highly conductive material |
| **R1** | TPE 80 Shore A, PP |
| **R2** | EPDM 80 Shore A, vulcanized |
| **R3** | TPE 70 Shore A, POM |
| **R4** | TPE 86 Shore A, PP |
| **R5** | TPE 52 Shore A, PP |
| **R6** | TPE 63 Shore A, POM |
| **R7** | TPE 50 Shore A, PP |
| **R8** | TPE 55 Shore A, PE |
| **R11** | TPE 50 Shore A, POM |
| **SER** | Self-extinguishing TPE |
| **SS** | Stainless steel |
| **SSS** | Stainless steel acid resistant |
| **TPC1** | Themoplastic Copolyester |
| **-HA** | Supports the HACCP concept |
| **HW** | High Wear resistant material |

| ⑦ Color* | |
|---|---|
| **AT** | Anthracite |
| **BG** | Beige |
| **BK** | Black |
| **BL** | Blue |
| **DB** | Dark blue |
| **GN** | Green |
| **LB** | Light blue |
| **LG** | Light gray |
| **OR** | Orange |
| **RE** | Red |
| **TQ** | Turquoise |
| **UC** | Uncolored |
| **WT** | White |
| **YL** | Yellow |

| ⑧ Height/Diameter/ Bore size and style |
|---|
| Height in mm (in)<br>Format: Hxxx<br>Pin diameter in mm (in)<br>Format: Dxxx |
| Bore size: SQ (= square) or RD (= round) either in mm or inches<br>Format: SQxxMM or RDxxIN |

| ⑨ Length/Width |
|---|
| Pins Length in mm (in)<br>Format: Lxxx<br>Module width in mm (in)<br>Format: Wxxx<br>REL in mm one decimal<br>Format: Wx.x |

* For each series' standard colors please refer to the table of materials for each belt (chapter 1.2). A number of other colors are available on request. Colors can vary from the original due to the print, production processes or material used.