EXCERPT FROM PROLINK ENGINEERING MANUAL

05/26 (Ref-No. 888)

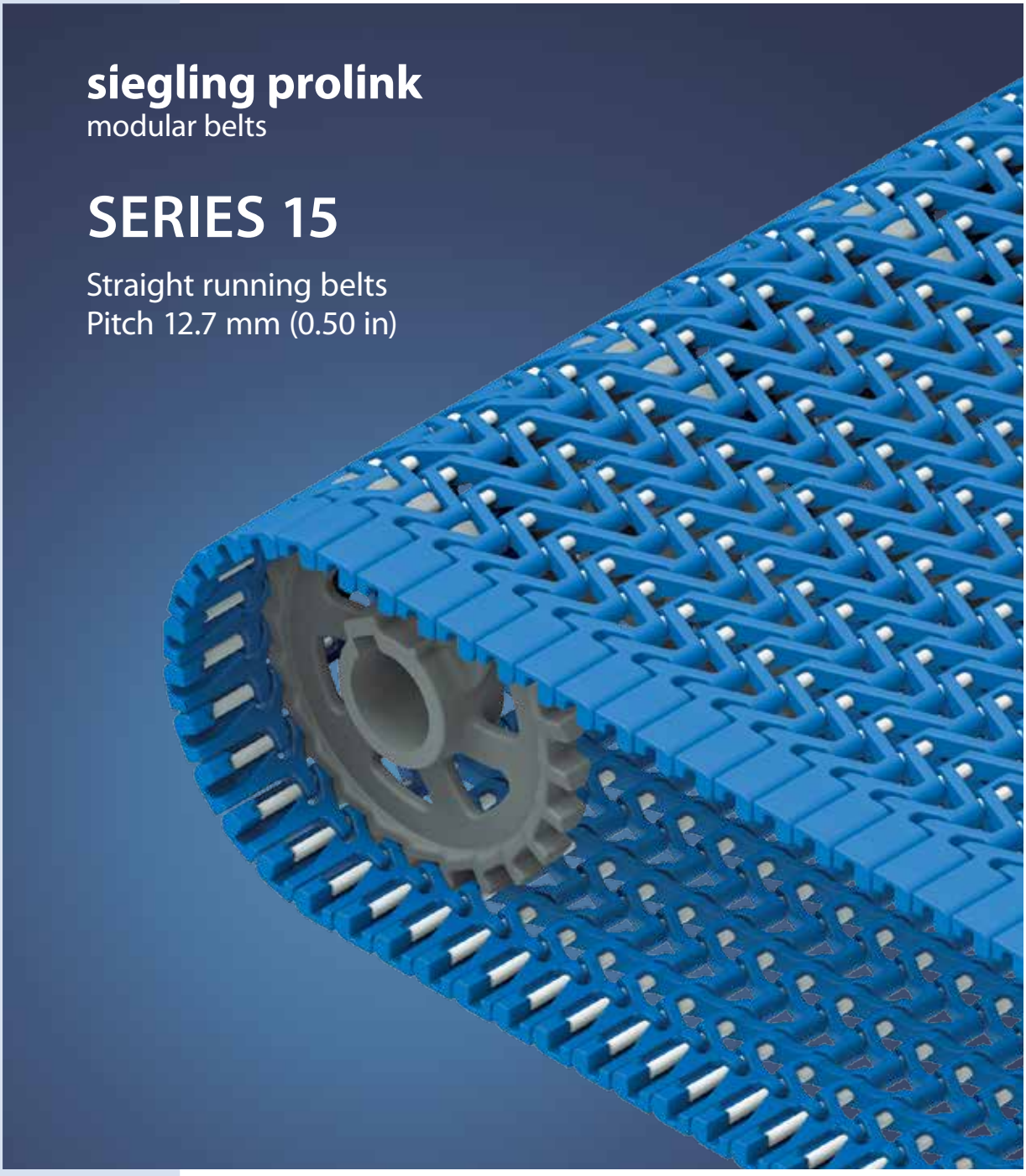

Forbo Siegling GmbH
Lilienthalstraße 6/8, D-30179 Hannover
Telefon +49 511 6704 0
www.forbo-siegling.com, siegling@forbo.com

Ref. no. 888-1_1.2_S15

SERIES 15 | **OVERVIEW**

Straight running belts | Pitch 12.7 mm (0.50 in)

siegling prolink
modular belts

Belts for light-duty food applications utilizing 12.7 mm (0.5 in) nose bars

Side view scale 1:1

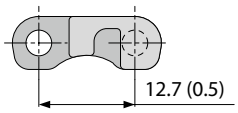

Design characteristics

- Mini-pitch belt with large open area for optimum airflow
- Scalloped underside facilitates smooth product transfer over a 12.7 mm (0.5 in) diameter nose bar.
- Open hinge for improved sanitation
- Narrow 25 mm (1 in) width increments offer superior support of conveyed products
- Solid and robust edge design incorporating improved pin retention
- Headless one-piece pin for easy installation and removal
- Sprockets with large solid tooth insures superior load transmission and long wear life

Basic data

Pitch	12.7 mm (0.50 in)
Belt width min.	203.2 mm (8 in)
Width increments	25.4 mm (1 in)
Hinge pins	3.4 mm (0.13 in) made of plastic (PBT, PP). One-piece up to a belt width of 4000 mm (157.5 in).

Sprockets
in different sizes with round or square bore



Available surface pattern and opening area

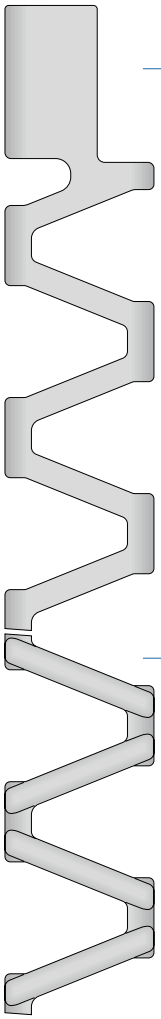

S15-47 GRT
Open (47 %), lattice-shaped surface

S15-47 RSA
Open (47 %), lattice-shaped surface with reduced surface area

NSF Certified

NSF-compliant from these certified Forbo plants: Huntersville (USA), Malacky (Slovakia), Tlalnepantla (Mexico)

SERIES 15 | **BELT TYPES**

siegling prolink
modular belts

Straight running belt | Pitch 12.7 mm (0.5 in)

S15-47 GRT | 47 % Opening | Grid top

Open area (47 %) for excellent air circulation and drainage | 31 % contact area (Largest opening: Ø = 8.5 mm/0.33 in) | Smooth surface | Easy-to-clean

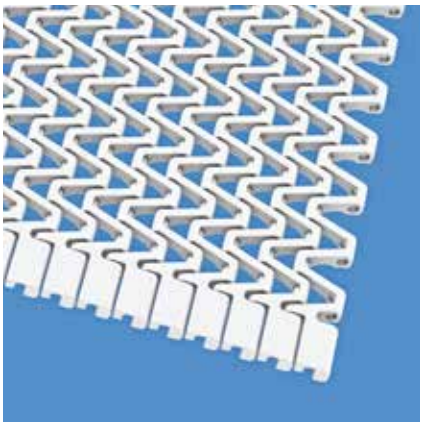

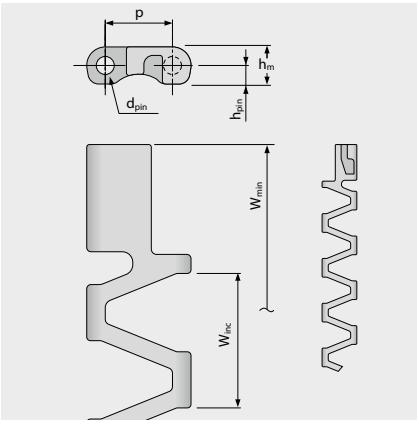

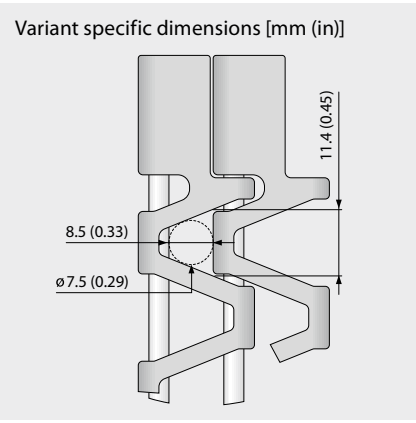

Belt dimensions

	p	d_{pin}	h_m	h_{pin}	h_s	W_{min}	W_{inc}	W_{tol}	Minimum flex radii[1]				
	Pitch	Pin Ø	Thickness	Pin position	Height	Width min.	Width Increment	Width tolerance [%]	r1 C_c x W_B	r2	r3	r4	r5
mm	12.7	3.4	7.0	3.5	–	203.2	25.4	±0.20	–	6.4	25.4	38.1	12.7
inch	0.5	0.13	0.28	0.14	–	8.0	1.0	±0.20	–	0.25	1.0	1.5	0.5

Available standard materials [3]

Belt		Pin		Nominal belt pull, straight		Weight		Width deviation	Temperature		Certificates[2]		
Material	Color	Material	Color	[N/mm]	[lb/ft]	[kg/m²]	[lb/ft²]	[%]	[°C]	[°F]	FDA	EU	MHLW
PA*	BL	PBT	UC	4.5	308	3.7	0.75	0.4	-40/120	-40/248	●	●	●
POM	BL	PBT	UC	5	343	4.3	0.88	-0.4	-45/90	-49/194	●	●	●
POM	WT	PBT	UC	5	343	4.3	0.88	-0.4	-45/90	-49/194	●	●	●
PP	BL	PP	WT	2.5	171	2.8	0.58	-1.0	5/100	41/212	●	●	●
PP	WT	PP	WT	2.5	171	2.8	0.58	-1.0	5/100	41/212	●	●	●
Mold to order belts													
PP	BL	PBT	UC	2.8	192	2.8	0.58	-1.0	5/100	41/212	●	●	●
PP	WT	PBT	UC	2.8	192	2.8	0.58	-1.0	5/100	41/212	●	●	●

* Values valid for dry applications (RH < 50 %). Belts in PA material will absorb water in wet environments, causing them to expand and reduce the nominal belt pull capacity.

BL (Blue), UC (Uncolored), WT (White)

All measurements and tolerances apply at 21 °C; for temperature deviations please see Prolink manual chapter 4.4 "Temperature influence".
All imperial dimensions (inches) are rounded off.

[1] Flex radii: r1 = side flex, r2 = front flex on roller, r3 = back flex on load bearing roller, r4 = back flex on Hold Down shoe, r5 = back flex on roller

[2] Complies with FDA 21 CFR | Complies with (EU) 10/2011 and (EC) 1935/2004 regulations regarding the raw materials used and the migration thresholds | Complies with Japanese MHLW Notification 370
● = available | – = not available | empty cells = not tested

[3] More materials and colors on request

Forbo
MOVEMENT SYSTEMS

SERIES 15 | **BELT TYPES**

Straight running belt | Pitch 12.7 mm (0.5 in)

siegling prolink
modular belts

S15-47 RSA | 47 % Opening | Reduced surface area

Open area (47 %) for excellent air circulation and drainage | 20 % contact area (Largest opening: Ø = 8.5 mm/0.33 in) | Smooth surface | Easy-to-clean

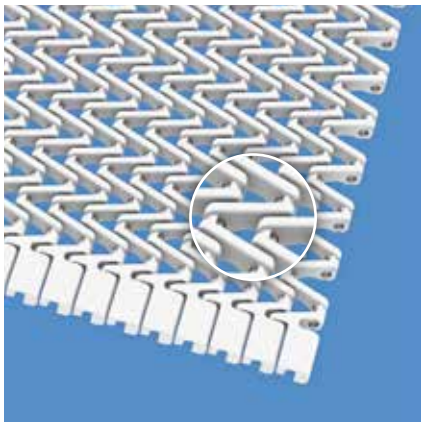

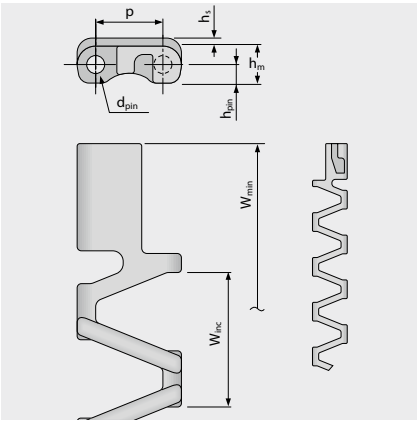

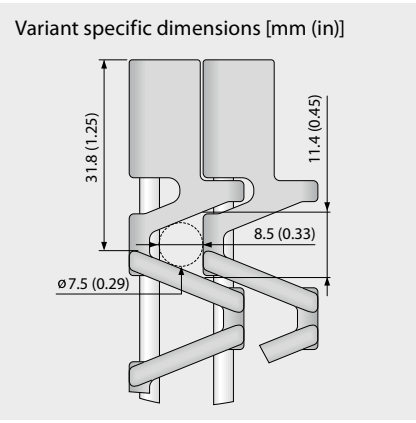

Belt dimensions

	p	d_{pin}	h_m	h_{pin}	h_s	W_{min}	W_{inc}	W_{tol}	Minimum flex radii[1]				
	Pitch	Pin Ø	Thickness	Pin position	Height	Width min.	Width Increment	Width tolerance [%]	r1 C_c x W_B	r2	r3	r4	r5
mm	12.7	3.4	7.0	3.5	1.5	203.2	25.4	±0.20	–	6.4	25.4	38.1	12.7
inch	0.5	0.13	0.28	0.14	0.06	8.0	1.0	±0.20	–	0.25	1.0	1.5	0.5

Available standard materials [3]

Belt		Pin		Nominal belt pull, straight		Weight		Width deviation	Temperature		Certificates[2]		
Material	Color	Material	Color	[N/mm]	[lb/ft]	[kg/m²]	[lb/ft²]	[%]	[°C]	[°F]	FDA	EU	MHLW
POM	BL	PBT	UC	5	343	5.2	1.07	-0.4	-45/90	-49/194	●	●	●
POM	WT	PBT	UC	5	343	5.2	1.07	-0.4	-45/90	-49/194	●	●	●
PP	BL	PP	WT	2.5	171	3.4	0.7	-1.0	5/100	41/212	●	●	●
Mold to order belts													
PA*	BL	PBT	UC	4.5	308	4.5	0.91	0.4	-40/120	-40/248	●	●	●
PP	BL	PBT	UC	2.8	192	3.4	0.7	-1.0	5/100	41/212	●	●	●
PP	WT	PBT	UC	2.8	192	3.4	0.7	-1.0	5/100	41/212	●	●	●
PP	WT	PP	WT	2.5	171	3.4	0.7	-1.0	5/100	41/212	●	●	●

* Values valid for dry applications (RH < 50 %). Belts in PA material will absorb water in wet environments, causing them to expand and reduce the nominal belt pull capacity.

BL (Blue), UC (Uncolored), WT (White)

All measurements and tolerances apply at 21 °C; for temperature deviations please see Prolink manual chapter 4.4 "Temperature influence".
All imperial dimensions (inches) are rounded off.

[1] Flex radii: r1 = side flex, r2 = front flex on roller, r3 = back flex on load bearing roller, r4 = back flex on Hold Down shoe, r5 = back flex on roller

[2] Complies with FDA 21 CFR | Complies with (EU) 10/2011 and (EC) 1935/2004 regulations regarding the raw materials used and the migration thresholds | Complies with Japanese MHLW Notification 370

● = available | – = not available | empty cells = not tested

[3] More materials and colors on request

Forbo
MOVEMENT SYSTEMS

S15 SPR | Sprockets



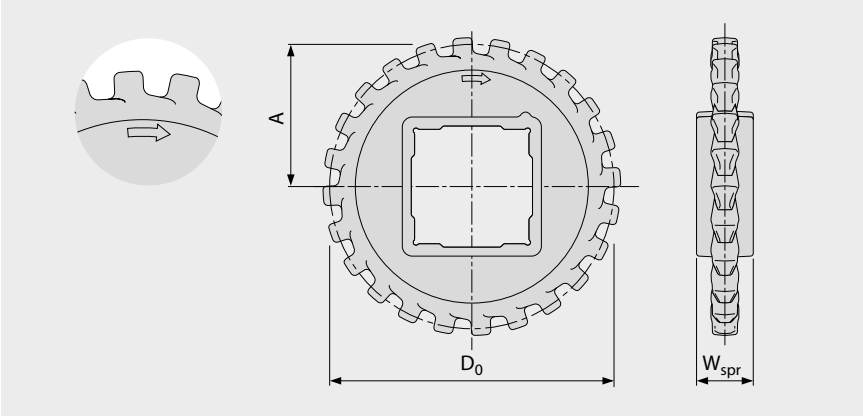

Main dimensions

Sprocket size (Number of teeth)		Z12	Z14	Z17	Z19	Z24	Z36
W_{spr}	mm	20.0	20.0	20.0	20.0	20.0	20.0
	inch	0.79	0.79	0.79	0.79	0.79	0.79
D_0	mm	50.6	58.9	71.3	79.6	100.4	150.3
	inch	1.99	2.32	2.81	3.13	3.95	5.92
A_{max}	mm	21.8	25.9	32.1	36.3	46.7	71.6
	inch	0.86	1.02	1.26	1.43	1.84	2.82
A_{min}	mm	21.0	25.3	31.6	35.8	46.3	71.4
	inch	0.83	1.00	1.24	1.41	1.82	2.81

Shaft bores (● = Round, ■ = Square)

20	mm		●	●			
25	mm	● / ■	●	●	● / ■	●	●
30	mm		●	●			
40	mm					■	■
0.75	inch		●	●			
1	inch	● / ■	● / ■	● / ■	● / ■	●	●
1.25	inch		●	●			
1.5	inch					■	■

Material: PA, Color: LG

LG (Light gray)

All measurements and tolerances apply at 21 °C.
All imperial dimensions (inches) are rounded off.
For detailed sprocket and shaft dimensions see appendix 6.3
Number of sprockets (sprocket spacing distance) see chapter 3.2

LEGEND

① Series
S1 … S19

② Open area/Sprocket size
Percentage open area Format: xx E.g. 20 = 20 %
For sprockets: number of teeth Format: "Z"xx E.g. Z12 = 12 teeth

③ Surface pattern	
BSL	Base module for slider
CTP	Cone top
CUT	Curved top
FLT	Flat top (smooth)
FRT-OG	Friction top without High Grip insert
FRT(X)	Friction top (Design X)
GRT	Grid top
HDK	High Deck
LRB	Lateral rib
MOD	Modified module shape
NCL	No cling
NPY	Negative pyramid
NSK	Non skid
NSK2	Non skid, nonwoven variant
NTP	Nub top (round studs)
PRR	Pin Retained Rollers
RAT	Radius top
RRB	Raised rib
RSA	Reduced surface area
RTP	Roller top
SRS	Slip-resistant surface

④ Type	
BPU	Bucket profile
CAP	Pin lock & belt edge sealing
CCW	Counter clockwise
CLP	Clip
CM	Center module
CW	Clockwise
FPL	Finger plate
HDT	Hold Down Tab
IDL	Idler
INS	Insert
PIN	Coupling rod
PMC	Profile module center
PMU	Profile module universal
PSP	ProSnap
PSU-0	Prof. scoop uni. closed
PSU-X	Prof. scoop uni. x% open
RI	High Grip insert
REL	Reinforcement Link (SS)
ROL	Rollers
RTR	Retaining ring
SG	Module with sideguard
SGL	Side guard, left
SGR	Side guard, right
SLI	Slider
SMA	Side module, A side
SMB	Side module, B side
SML	Side module, left
SMR	Side module, right
SMT	Side module, tight radius
SMU	Side module, universal/both sides
SPR	Sprocket
SPR-SP	Split sprocket, 2-part
SSL	Self stacker side module, left
SSR	Self stacker side module, right
TPL	Turning panel, left
TPR	Turning panel, right
UM	Universal module
WSC	Wheel Stopper Center
WSS	Wheel Stopper Side

⑤ Style	
1.6	1.6 collapse factor
1.7	1.7 collapse factor
2.2	2.2 collapse factor
2.2 G	2.2 collapse factor, guided
A90	Angle 90° to conveying direction
BT	Bearing tab
DR	Double row sprocket
F1, F2, F3 …	Collapse factor modules
G	Guided
GT	Guiding tabs
HD	Hold Down
HR	Hard removable pin
Ixx	xx = indent in mm
RG	Reversed guided
SG	Side guard
SP	Split sprocket
ST	Strong
V2	Version 2 indicates a design update

⑥ Material	
PA	Polyamide
PA-FR	Polyamide flame retadant
PA-FRHC	Polyamide, flame retadant, high conductive
PA-HT	Polyamide high temperature
PBT	Polybutylenterephthalate
PE	Polyethylene
PE-I	PE impact resistant
PE-MD	PE metal detectable
PK	Wear & impact improved polymer
PLX	Special PK for pins with small diameter – higher stiffness
POM	Polyoxymethylene (Polyacetal)
POM-CR	POM cut resistant
POM-HC	POM highly conductive
POM-MD	POM metal detectable
POM-PE	POM side modules + PE center modules
POM-PP	POM side modules + PP center modules
PP	Polypropylene
PP-MD	PP metal detectable
PP-SW	PP steam and hot water resistant
PXX-HC	Self-extinguishing highly conductive material
R1	TPE 80 Shore A, PP
R2	EPDM 80 Shore A, vulcanized
R3	TPE 70 Shore A, POM
R4	TPE 86 Shore A, PP
R5	TPE 52 Shore A, PP
R6	TPE 63 Shore A, POM
R7	TPE 50 Shore A, PP
R8	TPE 55 Shore A, PE
R11	TPE 50 Shore A, POM
SER	Self-extinguishing TPE
SS	Stainless steel
SSS	Stainless steel acid resistant
TPC1	Themoplastic Copolyester
-HA	Supports the HACCP concept
HW	High Wear resistant material

⑦ Color*	
AT	Anthracite
BG	Beige
BK	Black
BL	Blue
DB	Dark blue
GN	Green
LB	Light blue
LG	Light gray
OR	Orange
RE	Red
TQ	Turquoise
UC	Uncolored
WT	White
YL	Yellow

⑧ Height/Diameter/ Bore size and style
Height in mm (in) Format: Hxxx Pin diameter in mm (in) Format: Dxxx
Bore size: SQ (= square) or RD (= round) either in mm or inches Format: SQxxMM or RDxxIN

⑨ Length/Width
Pins Length in mm (in) Format: Lxxx Module width in mm (in) Format: Wxxx REL in mm one decimal Format: Wx.x

* For each series' standard colors please refer to the table of materials for each belt (chapter 1.2). A number of other colors are available on request. Colors can vary from the original due to the print, production processes or material used.