**siegling transilon**
conveyor and processing belts

# SIDEWALLS



**Siegling – total belting solutions**

forbo
MOVEMENT SYSTEMS

# Sidewalls

| | Article number | Thickness t [mm] | Height h [mm] | Width w [mm] | Pitch p [mm] | Shore A hardness | $d_{min}$ approx. [mm]** | Operating temperature permitted [°C] | Special feature |
|---|---|---|---|---|---|---|---|---|---|
| **PVC** | | | | | | | | | |
| FWG 5X40/P67-V60 green | 882020 | 5 | 40 | 52 | 67 | 60 | 100 | -10/+70 | robust due to fabric reinforcement |
| FWG 5X60/P67-V60 green | 882021 | 5 | 60 | 52 | 67 | 60 | 150 | -10/+70 | robust due to fabric reinforcement |
| FWG 5X80/P67-V60 green | 882022 | 5 | 80 | 52 | 67 | 60 | 200 | -10/+70 | robust due to fabric reinforcement |
| FWG 5X40/P67-V60 white FDA | 882023 | 5 | 40 | 52 | 67 | 60 | 100 | -10/+70 | robust due to fabric reinforcement |
| FWG 5X60/P67-V60 white FDA | 882024 | 5 | 60 | 52 | 67 | 60 | 150 | -10/+70 | robust due to fabric reinforcement |
| FWG 5X80/P67-V60 white FDA | 882025 | 5 | 80 | 52 | 67 | 60 | 200 | -10/+70 | robust due to fabric reinforcement |
| FW 5X33/P67-V60 green | 881150 | 5 | 33 | 52 | 67 | 60 | 80 | -10/+70 | |
| FW 5X40/P67-V60 white FDA | 880640 | 5 | 40 | 52 | 67 | 60 | 100 | -10/+70 | |
| FW 5X60/P67-V60 white FDA | 880641 | 5 | 60 | 52 | 67 | 60 | 150 | -10/+70 | |
| FW 5X80/P67-V60 white FDA | 880642 | 5 | 80 | 52 | 67 | 60 | 200 | -10/+70 | |
| FW 5X40/P67-V60 green | 880646 | 5 | 40 | 52 | 67 | 60 | 100 | -10/+70 | |
| FW 5X60/P67-V60 green | 880647 | 5 | 60 | 52 | 67 | 60 | 150 | -10/+70 | |
| FW 5X68/P67-V60 green | 882127 | 5 | 68 | 52 | 67 | 60 | 175 | -10/+70 | |
| FW 5X80/P67-V60 green | 880648 | 5 | 80 | 52 | 67 | 60 | 200 | -10/+70 | |
| **Urethane** | | | | | | | | | |
| FW 2X40/P30-U87 blue-RAL5015 FDA | 882221 | 2 | 40 | 36 | 30 | 87 | 80 | -30/+80 | smaller pitch for smaller end diameters |
| FW 2X40/P45-U87 blue-RAL5015 FDA | 882220 | 2 | 40 | 36 | 45 | 87 | 100 | -30/+80 | |
| FW 2X30/P30-U87 green FDA | 882035 | 2 | 30 | 36 | 30 | 87 | 50 | -30/+80 | smaller pitch for smaller end diameters |
| FW 2X40/P30-U87 green FDA | 882036 | 2 | 40 | 36 | 30 | 87 | 80 | -30/+80 | smaller pitch for smaller end diameters |
| FW 2X30/P45-U87 green FDA | 881246 | 2 | 30 | 36 | 45 | 87 | 80 | -30/+80 | |
| FW 2X40/P45-U87 green FDA | 881247 | 2 | 40 | 36 | 45 | 87 | 100 | -30/+80 | |
| FW 2X60/P45-U87 green FDA | 881248 | 2 | 60 | 36 | 45 | 87 | 150 | -30/+80 | |
| FW 2X30/P30-U87 white FDA | 882037 | 2 | 30 | 36 | 30 | 87 | 50 | -30/+80 | smaller pitch for smaller end diameters |
| FW 2X40/P30-U87 white FDA | 882038 | 2 | 40 | 36 | 30 | 87 | 80 | -30/+80 | smaller pitch for smaller end diameters |
| FW 2X30/P45-U87 white FDA | 881243 | 2 | 30 | 36 | 45 | 87 | 80 | -30/+80 | |
| FW 2X40/P45-U87 white FDA | 881244 | 2 | 40 | 36 | 45 | 87 | 100 | -30/+80 | |
| FW 2X60/P45-U87 white FDA | 881245 | 2 | 60 | 36 | 45 | 87 | 150 | -30/+80 | |
| **Polyester** | | | | | | | | | |
| FW 2X40/P45-E92 transparent FDA | 881213 | 2 | 40 | 46 | 45 | 92 | 100 | -10/+100 | |
| FW 2X60/P45-E92 transparent FDA | 881214 | 2 | 60 | 46 | 45 | 92 | 150 | -10/+100 | |
| FW 2X80/P67-E92 transparent FDA | 881155 | 2 | 80 | 52 | 67 | 92 | 200 | -10/+100 | |

Forbo Siegling's sidewall range focuses even more strongly on food safety and offers new options for more compact conveyor designs.

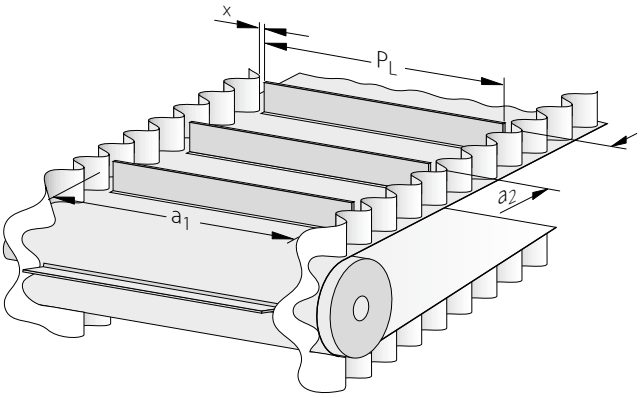


## The properties — The advantages

| The properties | The advantages |
|---|---|
| smaller pitch in PU sidewalls | smaller drum diameters (50 mm for 30 mm high sidewalls, 80 mm for 40 mm high sidewalls) |
| light | ideal for small conveyors |
| resistant to oil and grease | for use in the food and pharmaceuticals industries |

**Finished belt sizes available:**
Length: 2600 to 60000 mm, Width: 200 to 1300 mm

**Recommended splicing method:**
Stepped overlap or stepped Z-splice

**Inner distance between sidewalls:**
$a_1$ = 100 to 1200 mm (for $a_1$ < 150 mm deviations in edge parallelism are possible)

**Maximum profile length $P_{L\,max}$:** $P_{L\,max} = a_1 - 2x$ (with $x = 2^{+3}_{-0}$)

**Sidewall amplitude tolerances**: ± 1.0 mm

**Manual splice tolerances**:
Amplitude ± 3.0 mm; spacing distance ± 1.5 mm

# Recommended conveyor belt types

| | Article number | Total thickness approx. [mm] | Weight approx. [kg/m²] | Pull at 1% elongation ($K_{1\%}$ relaxed) [N/mm width]* | $d_{min}$ approx. [mm]** | Operating temperature permitted [°C] | Special feature |
|---|---|---|---|---|---|---|---|
| **PVC** | | | | | | | |
| E 10/M V1/V10 green | 900066 | 2.85 | 3.3 | 6 | 60 | -10/+70 | exceptionally robust |
| E 10/M V1/V10 MT white FDA | 900092 | 2.85 | 3.3 | 6 | 60 | -10/+70 | exceptionally robust |
| E 12/2 U0/V7 green | 900045 | 2.85 | 3.4 | 10 | 60 | -10/+70 | |
| E 12/2 U0/V20 MT-NA white FDA | 900050 | 3.7 | 4.4 | 10 | 60 | -10/+70 | non-antistatic |
| **Urethane** | | | | | | | |
| E 6/2 U0/U2-M green FDA | 906191 | 1.9 | 2 | 5.5 | 50 | -30/+100 | exceptionally laterally stiff |
| E 8/2 U0/U2 green FDA | 900320 | 1.4 | 1.6 | 6.5 | 40/25 (Z) | -30/+100 | |
| E 8/2 U0/U8 transparent FDA | 900024 | 2 | 2.2 | 7.5 | 60 | -30/+100 | |
| NP 6698 (E 14/2 U0/U4-M MT white FDA) | 906698 | 2.9 | 3 | 16 | 50 | -30/+100 | exceptionally laterally stiff, ideal for welding profiles and sidewalls |
| E 18/H U0/U2 MT white FDA | 906420 | 1.75 | 1.75 | 21 | 20 [1)] | -30/+100 | only limited suitability for swan neck conveyors |
| **Polyester** | | | | | | | |
| E 12/2 E0/E3 MT-TT transparent | 900348 | 1.7 | 1.8 | 10.5 | 50 [1)] | -30/+100 | |
| E 18/3 E0/E3 MT-TT transparent | 900350 | 2.6 | 2.8 | 14 | 60 | -30/+100 | |

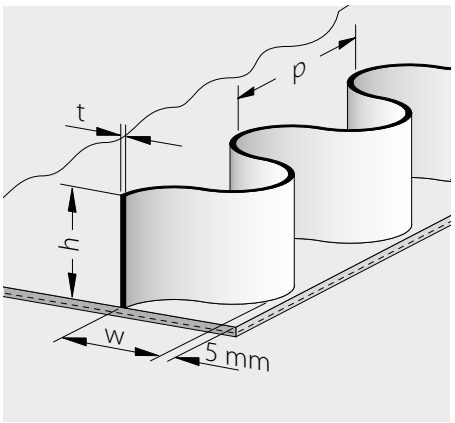


**Type key**

FWG 5 x 40 / P67 - V60 green

- Colour
- Hardness [Shore A]
- Material
- Pitch p [mm]
- Height h [mm]
- Thickness t [mm]
- Reinforced fabric
- Flat profile sidewall

**Key**

* Established in line with ISO 21181:2005

** When establishing the end diameter, take into account the dmin of the belt, of the lateral profile and of the sidewall. The highest value is important and must be adhered to. The $d_{min}$ figures are guidelines. They were determined at normal ambient conditions (20 °C/50 % humidity.) Lower temperatures require larger diameters.

1) May be lower for special applications. Please contact us.

**Please note:** the values stated are nominal and can fluctuate in a belt whose width is a result of production processes. Our products are constantly adapted to market requirements. Consequently, changes in technical parameters can occasionally occur.
**Therefore, please see the current product data sheets for specific information on designs and calculations.**

## Siegling – total belting solutions

Committed staff, quality oriented organization and production processes ensure the constantly high standards of our products and services.

Forbo Movement Systems complies with total quality management principles. Our quality management system has ISO 9001 certification at all production and fabrication sites. What's more, many sites have ISO 14001 environmental management certification.





### Our service – anytime, anywhere

Forbo Movement Systems employs around 2,500 people in its group of companies. Our products are manufactured in ten production facilities across the world.
You can find companies and agencies with warehouses and workshops in over 80 countries.
Service points are located in more than 300 places worldwide.

**Forbo Siegling GmbH**
Lilienthalstrasse 6/8, D-30179 Hannover
Phone +49 511 6704 0
www.forbo-siegling.com, siegling@forbo.com

Forbo
MOVEMENT SYSTEMS

**Ref. no. 120-2**
06/24 · UDH · Reproduction of text or parts thereof only with our approval. Subject to change.